NATIONAL SENIOR CERTIFICATE EXAMINATION
NOVEMBER 2016

CIVIL TECHNOLOGY

Time: 3 hours 200 marks

PLEASE READ THE FOLLOWING INSTRUCTIONS CAREFULLY

1. This question paper consists of 12 pages, a Formula Sheet and an Answer Booklet of 7 pages (i–vii). Please check that your question paper is complete.
2. Read all the questions carefully before answering the questions.
3. Use the mark allocation as a guide to the length of your answers.
4. Sketches may be used to illustrate your answers.
5. For the purpose of this question paper, the size of a brick should be taken as 220 mm × 110 mm × 75 mm.
6. Use your own discretion where dimensions and/or details have been omitted.
7. All drawings are to be fully dimensioned and neatly finished off with descriptive titles and notes to conform to the SABS Recommended Practice for Building Drawing.
8. All calculations and written answers must be done in the Answer Booklet given.
9. A non-programmable calculator can be used for calculations.
10. Please hand in this question paper.

REQUIREMENTS:

1. Drawing instruments
2. A non-programmable calculator
3. Answer Booklet

IEB Copyright © 2016

QUESTION 1 CONSTRUCTION, SAFETY AND MATERIALS

1.1 Choose a description from Column B that matches a term in Column A. Write down the numbers 1.1.1–1.1.5 below one another and next to the number of the most appropriate answer (letter), for example 1.1.1–A.

Column A Terminology	Column B Description
1.1.1 Concrete 1.1.2 Excavation 1.1.3 Ribbed bar 1.1.4 Glazing 1.1.5 Formwork	A. Type of metal that will not rust, silver in colour. B. Placing of glass in a finished building. C. Temporary support for fresh concrete. D. Overhang of roof at the gable end. E. Mixture of stone, sand and cement. F. A square piece of timber that is used for fixing ceiling boards. G. Removal of soil to level a building site. H. Material that absorbs water quickly. I. Type of ferrous metal used for reinforcing of concrete. J. Window frames are made from this lightweight metal.

(5)

1.2 Explain FOUR safety regulations that need to be adhered to when excavating a trench deeper than 1,5 m. (4)

1.3 Roof trusses play an important role in any building.

1.3.1 Draw a line diagram of the SA roof truss and label any THREE parts of the roof truss. (4)

1.3.2 Draw a neat sketch to indicate at wall end the difference between a GABLE roof and a HIPPED roof. (4)

1.4 You are appointed as a safety officer on a building site. Describe TWO aspects that you will inspect to comply with building site safety. (2)

1.5 The slump test is widely used in the building industry.

1.5.1 Name ONE piece of equipment used in the slump test. (1)

1.5.2 Describe the purpose of conducting a slump test. (1)

1.5.3 Name ONE other test that can be carried out on concrete AND why this test will be done. (2)

IEB Copyright © 2016

1.6 FIGURE 1.6 shows THREE different metal profiles. Write down the numbers 1–3 below one another and next to the number the name of that specific profile used in the industry.

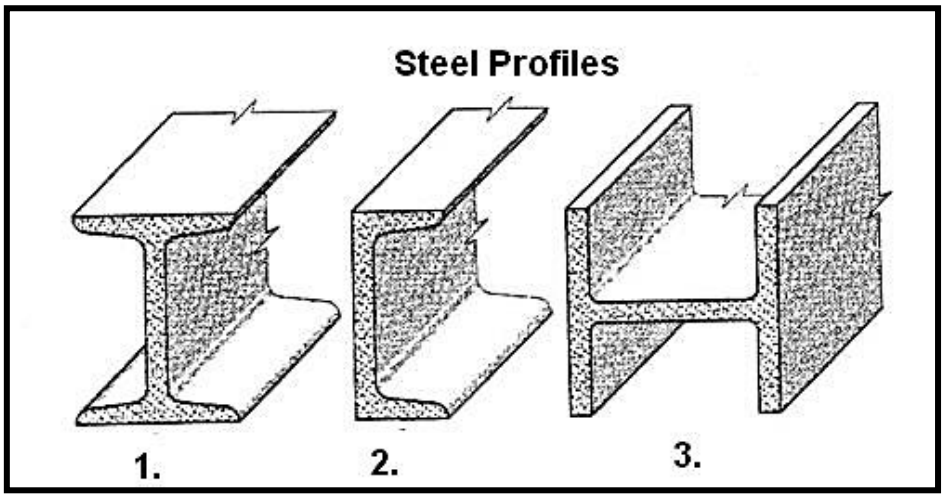

Figure 1.6

(3)

1.7 FIGURE 1.7 below shows the construction of a drywall. Write down the numbers 1–4 below one another and next to the number of the terminology used in the construction of a drywall.

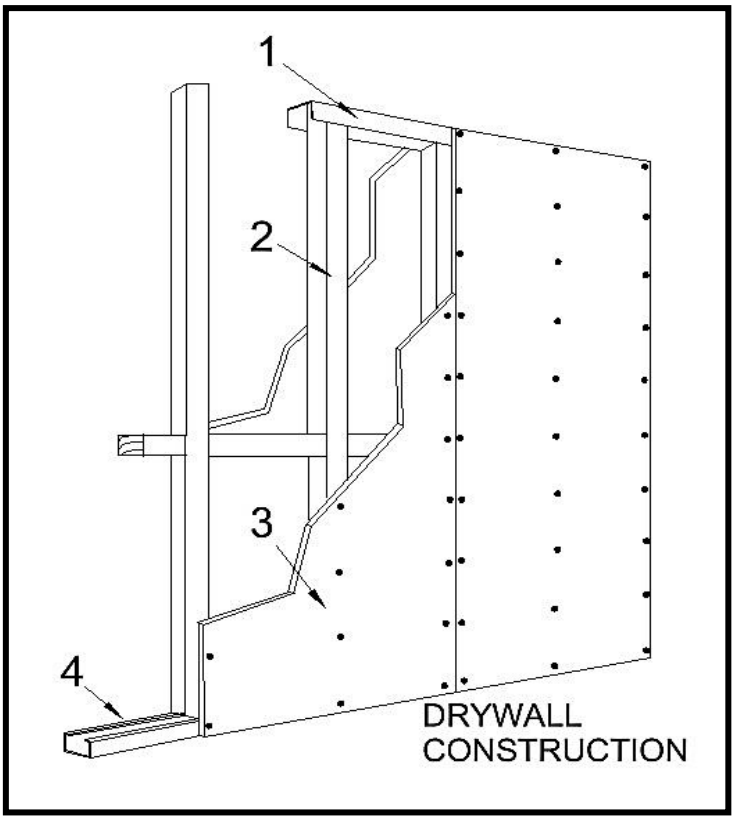

Figure 1.7

(4)

[30]

QUESTION 2 ADVANCED CONSTRUCTION AND EQUIPMENT

2.1 Hand tools are an asset to any tradesman. Assume you are a tradesman. Explain how you will take care of your portable circular saw to ensure that the tool will serve you well over a long period of time. (3)

2.2 FIGURE 2.2 below shows a scaffold with working platform.

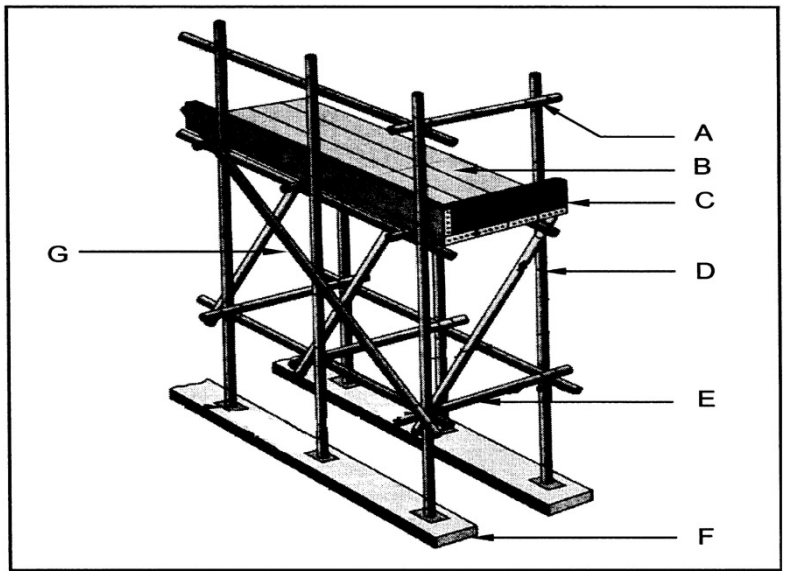

[DBE: Civil Technology 2012]

Figure 2.2

2.2.1 Identify the type of scaffold. (1)

2.2.2 Explain the purpose of part G. (1)

2.2.3 Describe TWO safety precautions that you will take when working on a scaffold. (2)

2.2.4 Write down the letters A–D and state the specific name of that part of the scaffold. (4)

2.3 There is sufficient evidence in the media that certain developers do not take construction failures seriously.

2.3.1 State THREE factors that needs to be taken into consideration when planning a rib and block floor. (3)

2.3.2 Name ONE other method of placing a suspended concrete floor. (1)

2.4 Draw on the Answer Booklet what you will see through the eyepiece of a dumpy level looking at a vertical height of 3 330 mm on the telescopic staff. (4)

IEB Copyright © 2016

2.5 FIGURE 2.5 below shows the cross section of the formwork used for stairs. Study the diagram below and answer the questions that follow:

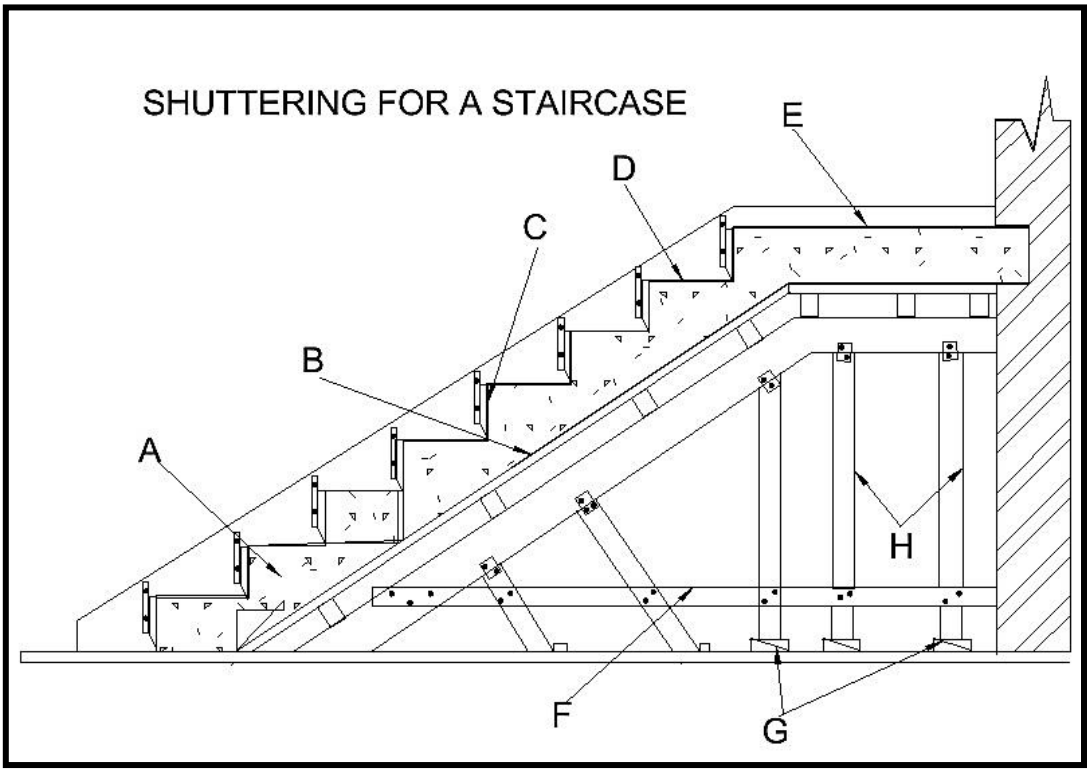

Figure 2.5

Write down the letters B, C, D, E and G below one another and state the terminology used for each part. (5)

2.6 Name TWO characteristics of materials that can be used for formwork. (2)

2.7 Pile foundations are used when the soil is not load bearing. Name TWO different pile foundations and a brief explanation how the pile foundation is inserted into the soil. (4)

2.8 The following code is used on a drawing when reinforcing is used. Explain the coding system: **12 Y 1210 – 300**. (5)

2.9 Explain the difference between a rough and a gauged arch. (2)

2.10 While spending time on a building site, you hear the following terminology being used. Explain briefly what you understand by the following terms:

2.10.1 Curing of concrete. (1)

2.10.2 Segregation of concrete. (1)

2.10.3 Beam filling. (1)

[40]

IEB Copyright © 2016

QUESTION 3 CIVIL SERVICES

3.1 A conservancy tank can be used in the absence of a waterborne sewerage system and where a septic tank is not viable. Make a neat, labelled sketch of the sectional view of a conservancy tank. The following must be shown:
Inlet, outlet, valve chamber, pipe diameters, floor slope and manhole cover (8)

3.2 FIGURE 3.2 on the Answer Booklet shows a line diagram of a small dwelling.

3.2.1 Draw the symbols for the sanitary fittings indicated by numbers 1–4 on the Answer Booklet.

1. Water-closet
2. Shower
3. Wash basin
4. Double-bowl kitchen sink (4)

3.2.2 On the Answer Booklet design a suitable sewerage system for this dwelling. Take into consideration all regulations and design principles of a good sewerage system.
Indicate all sewerage abbreviations where applicable. (8)

3.2.3 Draw the electrical symbols indicated by letters A–C on the Answer Booklet.

A. Filament light
B. Switched socket outlet
C. Single tube fluorescent light (3)

3.3 Redraw the table below in your Answer Book and describe TWO advantages and TWO disadvantages of using copper pipes in your house.

ADVANTAGES	DISADVANTAGES

(4)

3.4 Grease traps help in preventing unwanted blockages in a sewerage system.

3.4.1 Explain briefly how a grease trap works. (2)

3.4.2 Name ONE place where it will be wise to install a grease trap. (1)

[30]

IEB Copyright © 2016

QUESTION 4 QUANTITIES, MATERIALS AND JOINING

4.1 A variety of fixatives are used in the construction industry to join materials.

4.1.1 Name ONE use of mild steel nails. (1)

4.1.2 Why are clout nails the best to use when installing ceiling boards? (1)

4.1.3 Name ONE use of panel pins. (1)

4.1.4 Name ONE method to join PVC pipes. (1)

4.1.5 Name TWO methods to join copper pipes. (2)

4.2 A screw is basically an improved nail and is designed by threading the shaft of a nail.

Describe THREE advantages of screws over nails. (3)

4.3 FIGURE 4.3 below shows a table of an incomplete cutting list where some of the headings for the columns are omitted. Write down the numbers 4.3.1 to 4.3.3 below one another and next to the number the heading for the specific column.

4.3.1	**Quantity**	**Unit**	**Length**	**4.3.2**	**4.3.3**	**Total**	**Material**
Stiles	2	mm	2 043	114	44	4 064	Hardwood

Figure 4.3

(3)

4.4 FIGURE 4.4 shows the floor plan of a building with a gable roof. Use the Answer Booklet to answer the following questions:

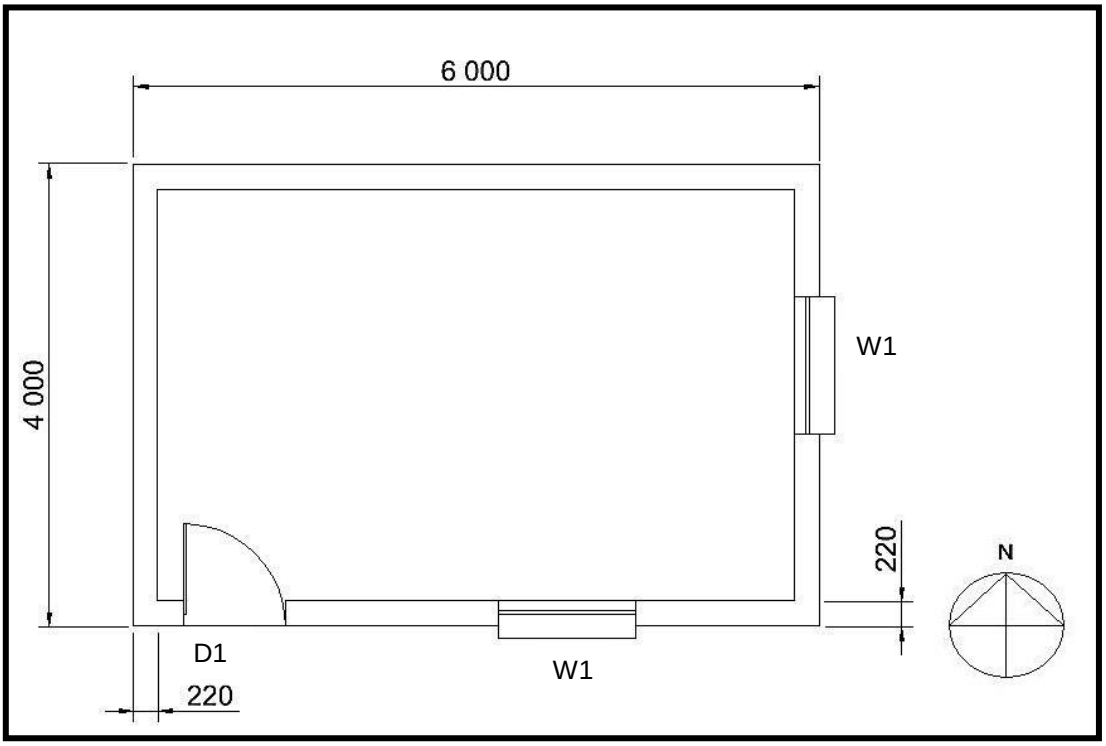

Figure 4.4

4.4.1 Calculate the total area and perimeter in metre for the building. (5)

4.4.2 Calculate the number of bricks needed to build the SOUTHERN wall of the dwelling, using the following specifications:

- Door size: 2 100 mm × 900 mm
- Window size (W1): 1 500 mm wide × 1 200 mm high
- Height of the wall is 2 700 mm
- 110 bricks are required to build one square metre of a 220 mm wall (5)

4.4.3 Calculate the volume of concrete for the 75 mm thick floor slab. The floor slab lies flush with the inside walls. (Round off your answer to TWO decimal places.) (4)

4.4.4 Calculate the amount of stone only, that needs to be bought in cubic metre, if your mix ratio is 2 (cement) : 4 (stone) : 4 (sand) for this floor slab. (Round off your answer to TWO decimal places.) (4)

[30]

IEB Copyright © 2016

QUESTION 5 APPLIED MECHANICS

5.1 FIGURE 5.1 below shows a lamina. All measurements are in millimetre. Study the lamina and answer the following questions:

5.1.1 Calculate the total area of the lamina. (5)

5.1.2 Calculate the centroid of the lamina from AA. (5)

Round off your answer to TWO decimal places

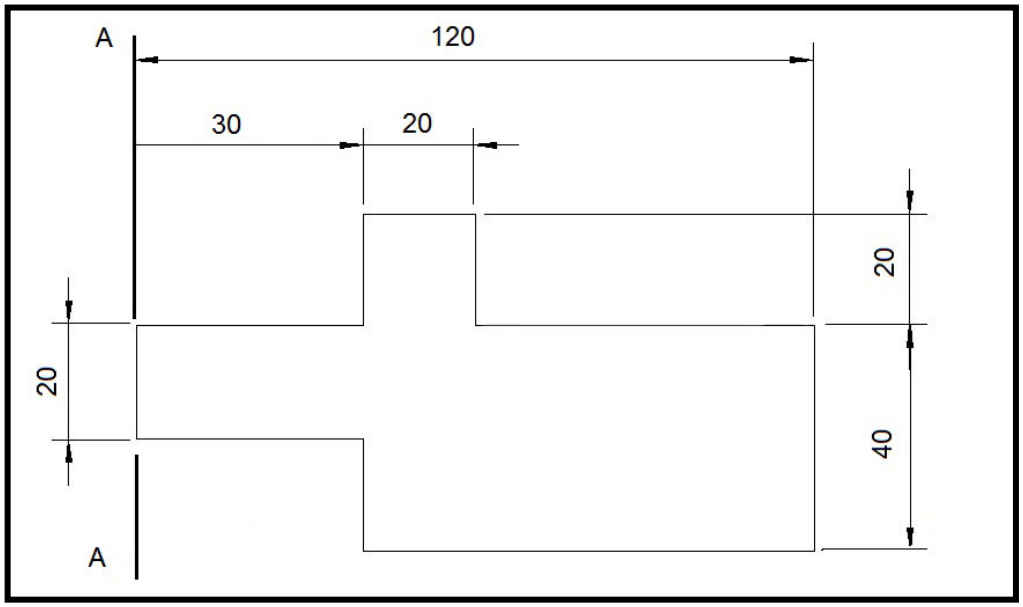

Figure 5.1

5.2 FIGURE 5.2 below shows the space diagram of a framed roof truss.

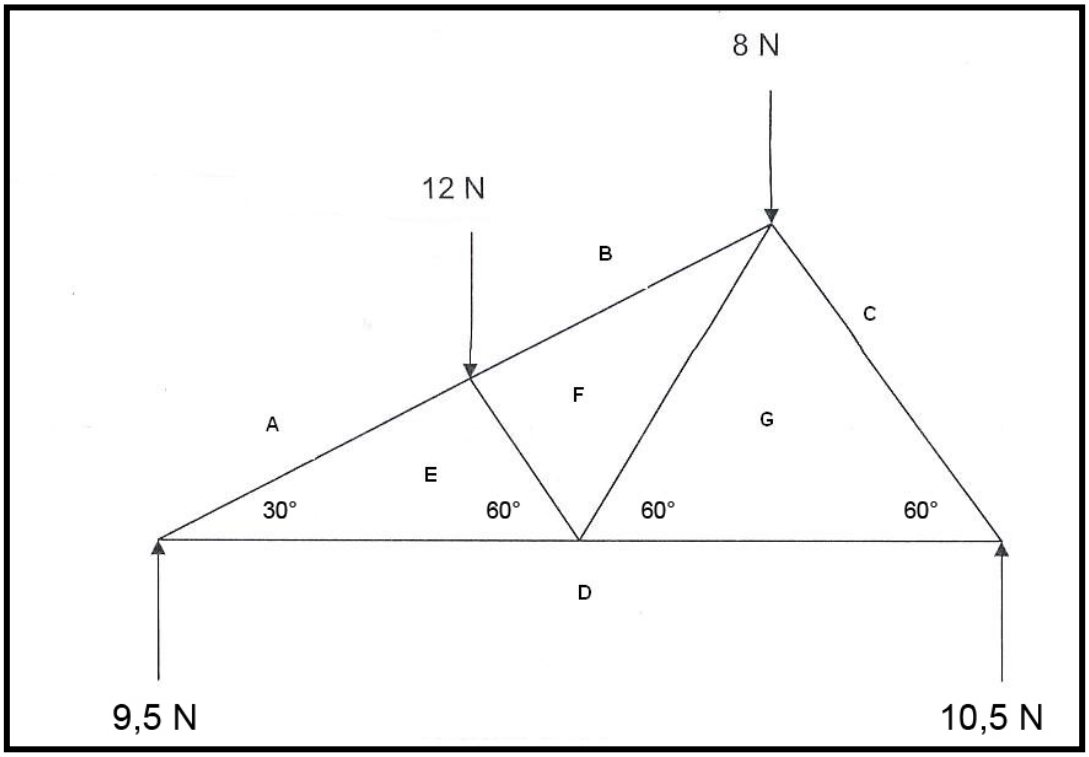

Figure 5.2

5.2.1 On the Answer Booklet, draw the remaining members to finish the vector diagram on the partially drawn vector diagram.
Use scale 5 mm = 1 N (6)

5.2.2 Determine the magnitude for the following members:
A: AE
B: FG (2)

5.2.3 On the Answer Booklet, indicate the nature of the different members on the space diagram by means of arrows. (6)

5.3 FIGURE 5.3 shows a beam of 5 metres resting on two supports. The beam carries a UDL of 2 kN/m across 2 metres on the right end and three point loads.

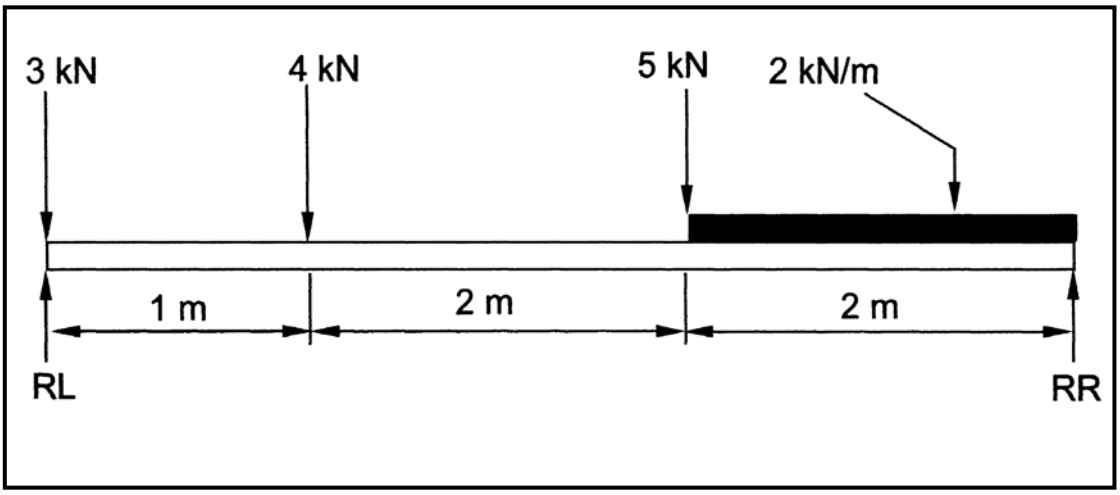

Figure 5.3

Calculate the magnitude of the reaction force at RR and RL. (6)

[30]

IEB Copyright © 2016

QUESTION 6 GRAPHICS AND COMMUNICATION

6.1 FIGURE 6.1 below shows the sectional view on cutting plane A–A of the incomplete floor plan shown in FIGURE 6.2 on the next page. Answer the questions that relate to the sectional drawing in the Answer Booklet.

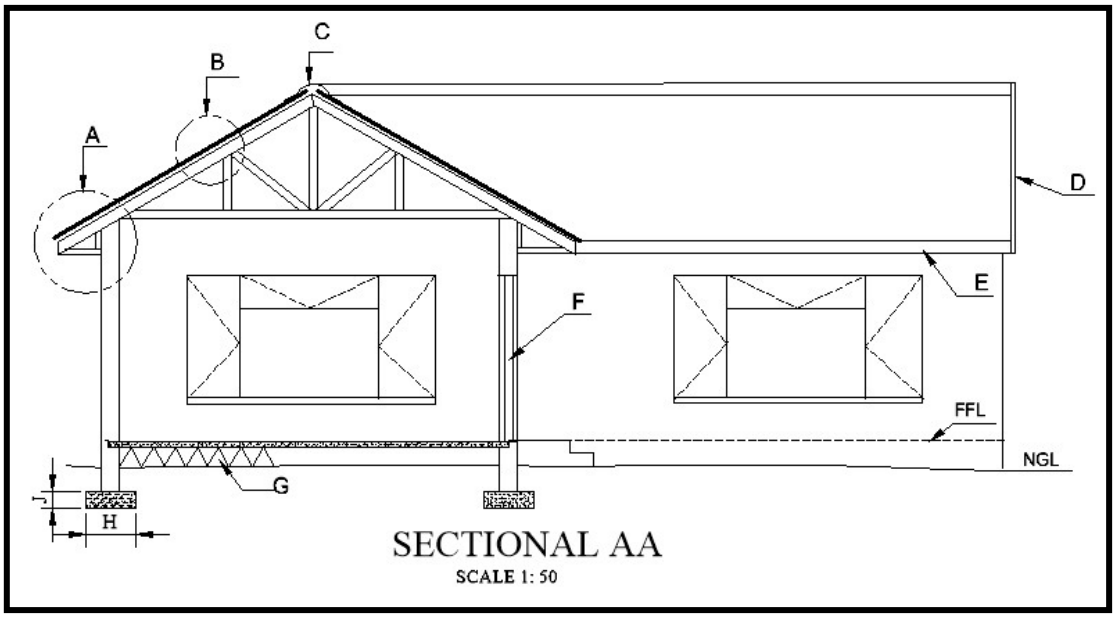

Figure 6.1

(15)

6.2 FIGURE 6.2 on the next page shows the floor plan of a proposed building.

6.2.1 Develop and draw the SOUTH elevation of the building in FIGURE 6.2, in the Answer Booklet. Use a scale of 1 : 50. Use the specifications and the window schedule given below.

Specifications:

- The door is 2 000 mm high and 900 mm wide.
- The roof is covered with galvanised sheeting and finished with 220 mm fascia and barge boards.
- Rainwater downpipes are 75 mm in diameter and 100 mm square gutters.
- The height between FFL and wall plate is 2 700 mm.
- The height between NGL and FFL is 300 mm.
- The eave overhang is 500 mm.
- The verge is 200 mm.
- The door step is 150 mm high.
- The building has a gable roof with a valley at a pitch of 30°.

(21)

6.2.2 Indicate any FOUR labels. (4)

IEB Copyright © 2016

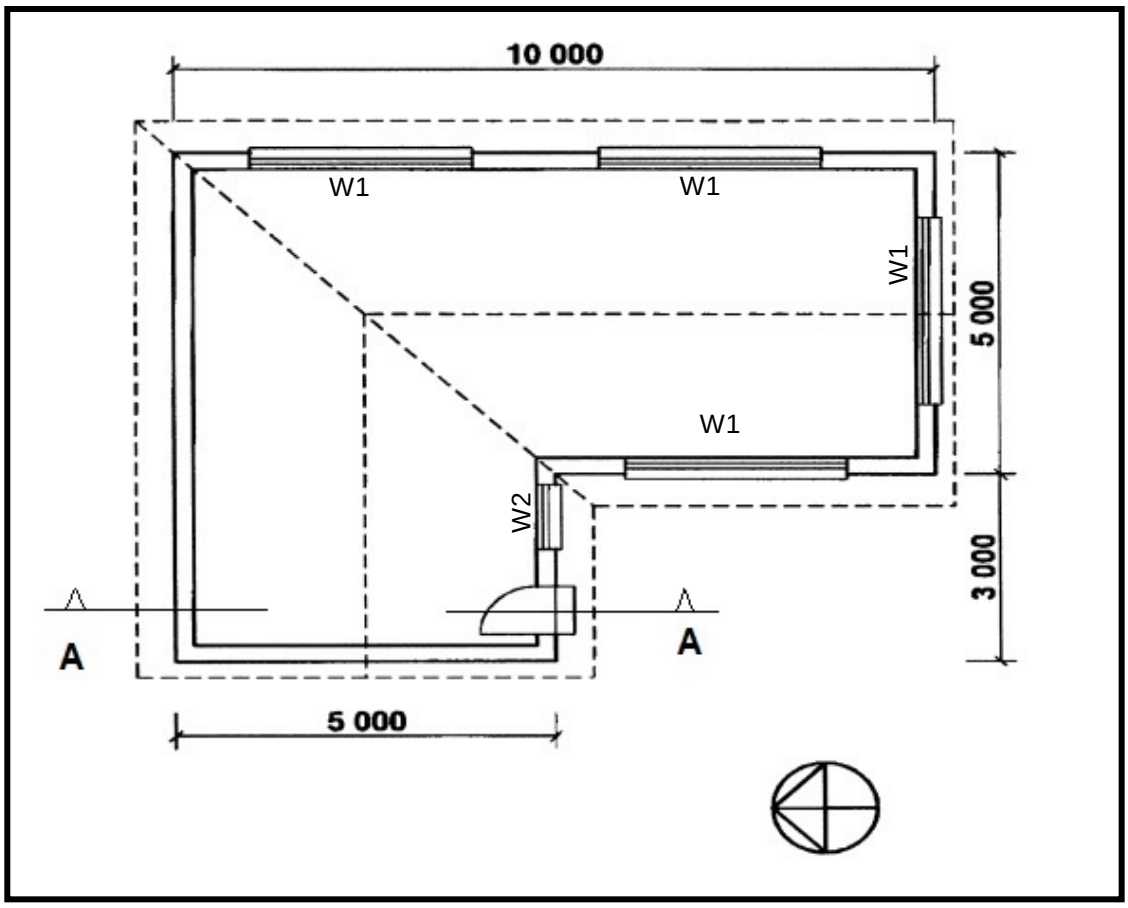

Figure 6.2

Window Schedule

WINDOW SCHEDULE			
WINDOW 1 (W 1)		WINDOW 2 (W 2)	
WIDTH	HEIGHT	WIDTH	HEIGHT
3 000	1 500	1 000	1 500

[40]

Total: 200 marks

IEB Copyright © 2016