MARKING GUIDELINES

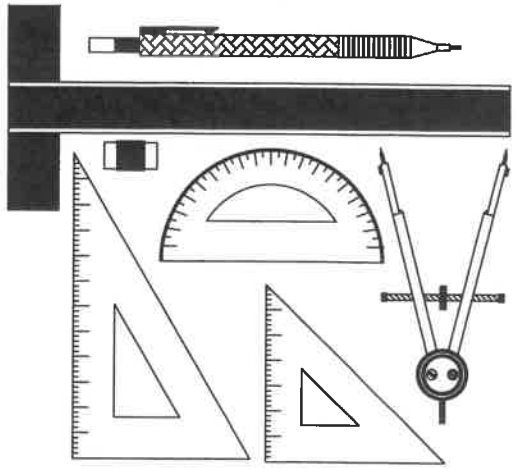

NATIONAL SENIOR CERTIFICATE EXAMINATION

MAY 2022

ENGINEERING GRAPHICS AND DESIGN

PAPER 1

MARKS: 200
TIME: 3 HOURS

PLEASE READ THE FOLLOWING INSTRUCTIONS CAREFULLY

1. This question paper consists of **6 pages** including the cover page and **4 questions**.
2. **All** questions must be answered.
3. Unless specified otherwise, all questions are in **First-Angle Orthographic Projection**.
4. Unless specified otherwise, **all** questions are to be completed to a **scale of 1:1**.
5. **All** answer sheets must be restapled in numerical order, even questions that have not been answered.
6. All **construction work** must be shown.
7. Print your **examination number** neatly on each page.
8. Use only the **answer sheets** provided.
9. Your drawings should reflect **neatness** and **accuracy**.
10. All dimensions or detail not given may be **assumed** in **good proportion**.
11. Your drawings should comply with SANS 10143.
12. All measurements are in millimetres (mm) unless otherwise indicated.

FOR OFFICIAL USE ONLY				
QUESTION	SECTION	MARK	MODERATED	MAXIMUM	CODE
1	CIVIL ANALYTICAL			20	
2	INTERPENETRATION & DEVELOPMENT			40	
3	TWO-POINT PERSPECTIVE			40	
4	CIVIL DRAWING			100	
	TOTAL			200	

CHECKED BY

EXAMINATION NUMBER

IEB COPYRIGHT © 2022

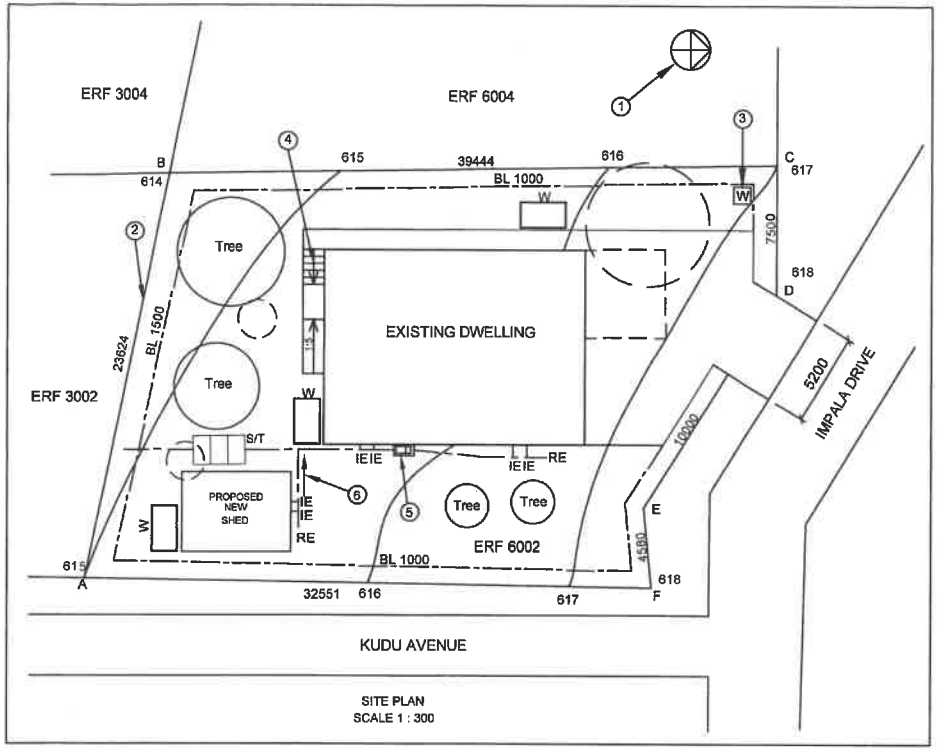

PLEASE NOTE: THIS SITE PLAN IS NOT DRAWN TO THE INDICATED SCALE

STUDY THE ABOVE DRAWING AND ANSWER THE QUESTIONS THAT FOLLOW.
CIRCLE THE LETTER CORRESPONDING TO YOUR CHOICE OF ANSWER.

1.1 In what units are the dimensions on this site plan?	A	CENTIMETRES	**B**	MILLIMETRES	C	METRES	D	UNKNOWN	1
1.2 What is the indicated scale of this drawing?	A	1 : 100	B	1 : 50	**C**	1 : 300	D	1 : 30	1
1.3 How many trees on ERF 6002 need to be removed?	A	4	B	6	C	2	**D**	3	1
1.4 In which direction would you be walking, if you walked up the ramp?	A	NORTH	B	SOUTH	C	EAST	**D**	WEST	1
1.5 Which is the lowest corner on ERF 6002?	A	A	**B**	B	C	C	D	F	1
1.6 What is the feature at 1 called?	**A**	NORTH POINT	B	WIND DIRECTION	C	SLOPE	D	COMPASS	1
1.7 What is the feature at 2 called?	A	BOUNDARY LABEL	**B**	BOUNDARY LINE	C	BUILDING LINE	D	BUILDING LABEL	1

QUESTION 1
CIVIL ANALYTICAL

1.8 What is the feature at 3 called?	A	WASTE TANK	B	WATER TANK	C	WATER METER	**D**	ELECTRICITY METER	1
1.9 What does the arrow at feature 4 indicate?	A	DIRECTION	B	WEST	**C**	UP	D	DOWN	1
1.10 What is the feature at 5 called?	A	SEPTIC TANK	B	GULLY	**C**	GREASE TRAP	D	STEP	1
1.11 How many water tanks are there on ERF 6002?	A	NONE	B	1	C	2	**D**	3	1
1.12 How close to ERF 6004 could a new building be built?	A	1500 mm	**B**	1000 mm	C	1500 m	D	1000 m	1
1.13 How many rodding eyes are there in the drawing?	A	6	B	4	**C**	2	D	1	1
1.14 What does the arrow indicate at feature 6?	**A**	DIRECTION OF FLOW	B	DIRECTION OF RAMP	C	DIRECTION OF WIND	D	WALKWAY DIRECTION	1

1.15 In the space below, determine the perimeter of ERF 6002 in metres (m). Round your answer to 2 decimal places. 2

Perimeter = 23624+39444+7500+5200+10000+4580+32551
= 122.90 m

Answer: 122.90 m

1.16 Which of the following symbols correctly indicate a fire hydrant according to SANS 10143? 1

A	B	C	D
			

1.17 By how many metres is the highest point on ERF 6002 above the lowest point?

A	2	B	3	**C**	4	D	7	1

1.18 In the space below, draw, in NEAT freehand, the PLAN VIEW and ELEVATION VIEW of the SANS 10143 convention for a water closet (toilet). 2

PLAN VIEW	ELEVATION VIEW
	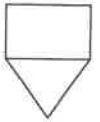

20 MARKS

ANSWER SHEET 1

EXAMINATION NUMBER

IEB COPYRIGHT © 2022

QUESTION 2

INTERPENETRATION & DEVELOPMENT

The figures below show the INCOMPLETE Front View as well as a COMPLETE Top View and LEFT View of a **HEXAGONAL PIPE** penetrated by an **EQUILATERAL TRIANGULAR DUCT.** The views are drawn in First Angle Orthographic Projection. Auxiliary views of the triangular duct are also shown.

Draw the following:

2.1 the complete FRONT view clearly showing the curve of interpenetration. Show all hidden detail.

2.2 the development of the 3 panels of the hexagonal pipe that are being penetrated.

Show all construction.
It is not necessary to draw the left view.

Front View:		26
Given	●	= 4
Hidden Detail	♥	= 10
Interpen	♦	= 7
Solid Lines	♠	= 5
Construct	♣	= 2
Development	✓	=12
		40

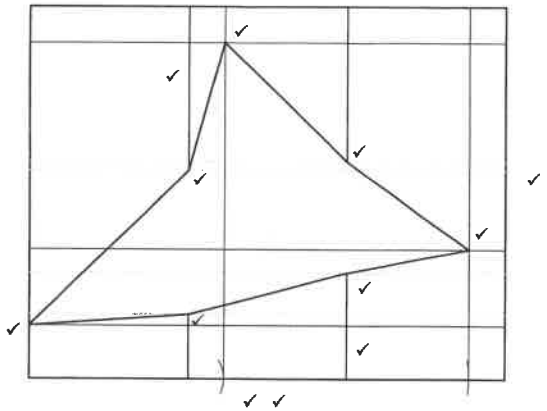

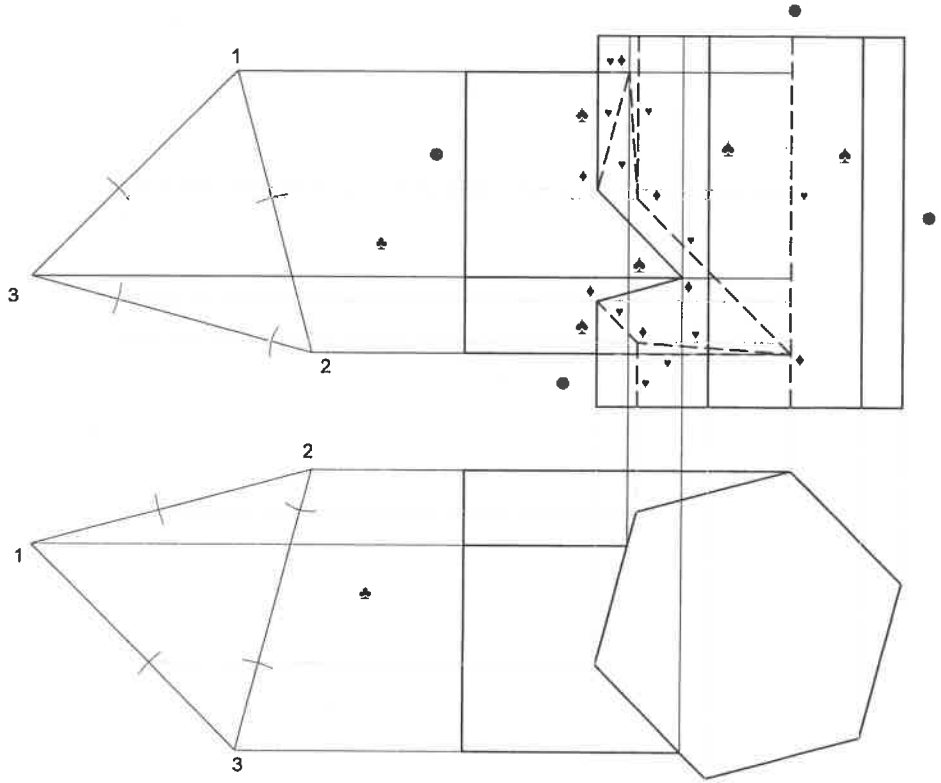

ASSESSMENT CRITERIA

You will be assessed on your ability to do the following:

• draw the given incomplete Front View	4
• complete the Front View	22
• show necessary construction	2
• develop 3 panels of the hexagonal pipe	12

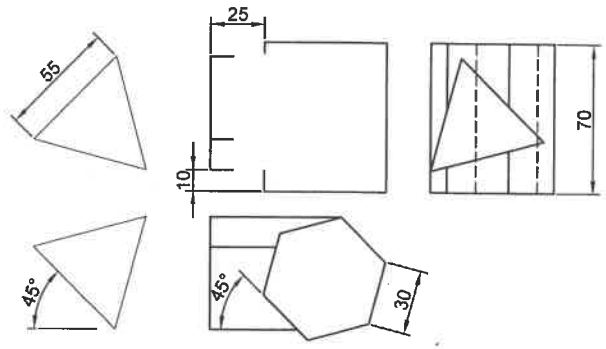

FV 26	
CON 2	
DEV 12	
40 MARKS	

EXAMINATION NUMBER

ANSWER SHEET 2

IEB COPYRIGHT © 2022

QUESTION 3

TWO-POINT PERSPECTIVE

PTS	•38/2	=	19
Key PTS	✓	=	9
CON	✓	=	3
Arc	•	=	7
VPS	•	=	2
			40

The figures show the three views of a house with a garage. Draw a neat two-point perspective view of this building.

PP - Picture Plane
HL - Horizon Line
GL - Ground Line
SP - Station Point

Show the wall thickness where applicable.
Determine and label the vanishing points RVP and LVP
NO HIDDEN DETAIL IS REQUIRED.

ASSESSMENT CRITERIA

You will be assessed on your ability to do the following:

- determine and label the vanishing points 2
- draw the two-point perspective view 38

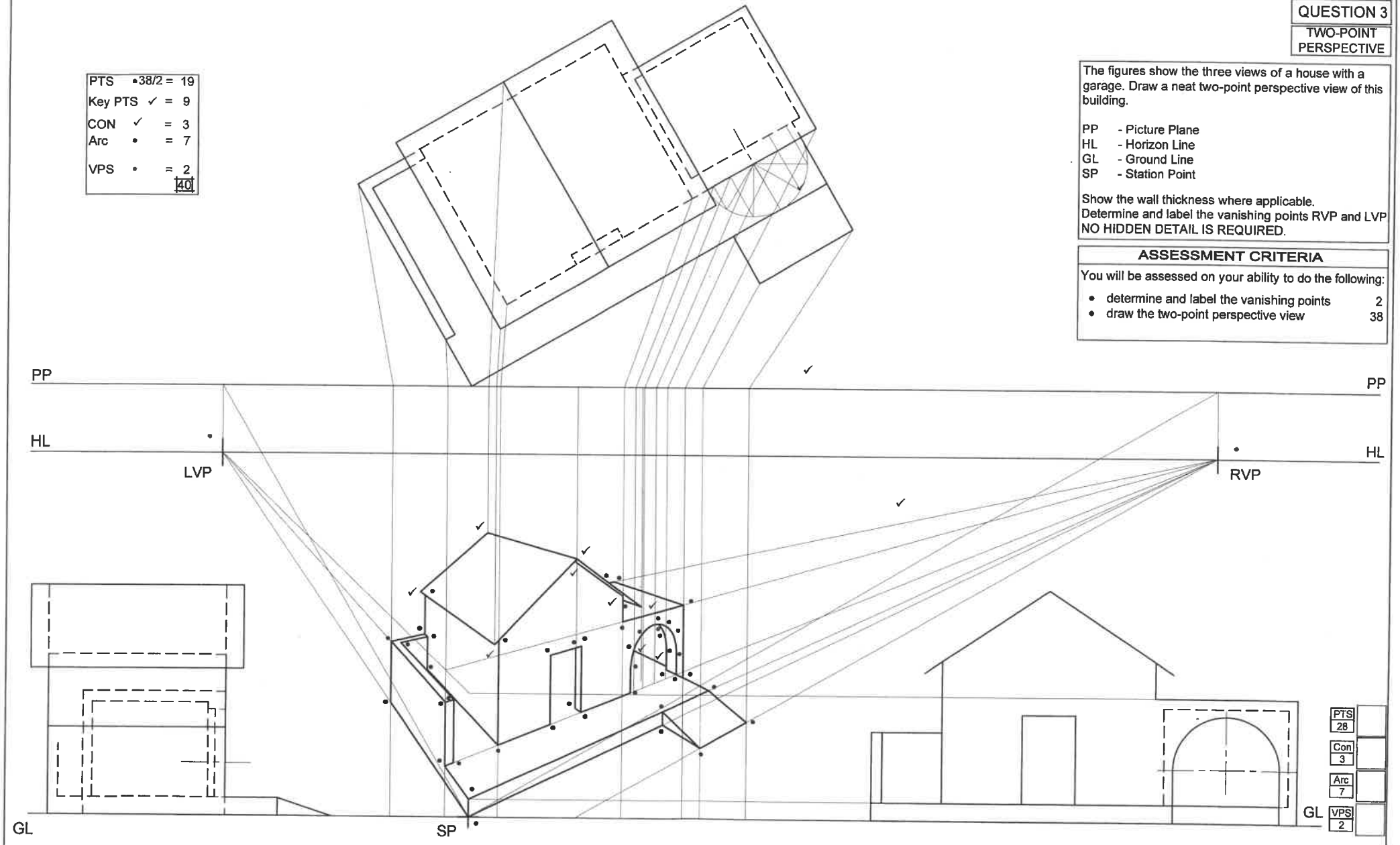

PTS 28
Con 3
Arc 7
VPS 2

40 MARKS

EXAMINATION NUMBER

ANSWER SHEET 3

IEB COPYRIGHT © 2022

QUESTION 4

CIVIL DRAWING

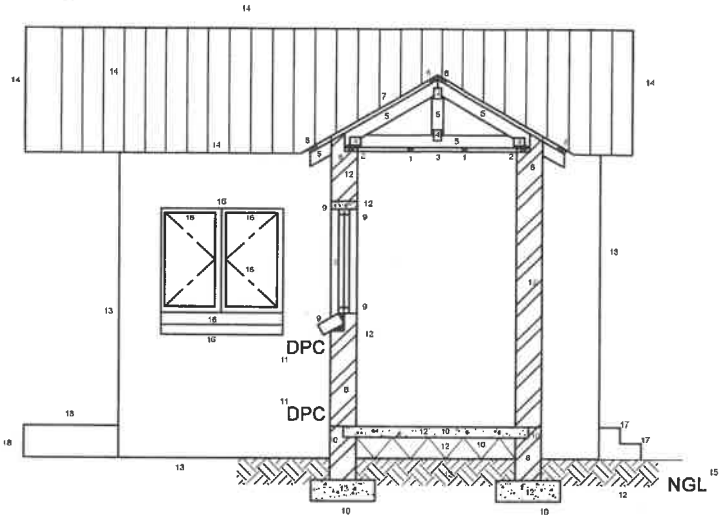

SECTIONAL SOUTH ELEVATION ON A-A

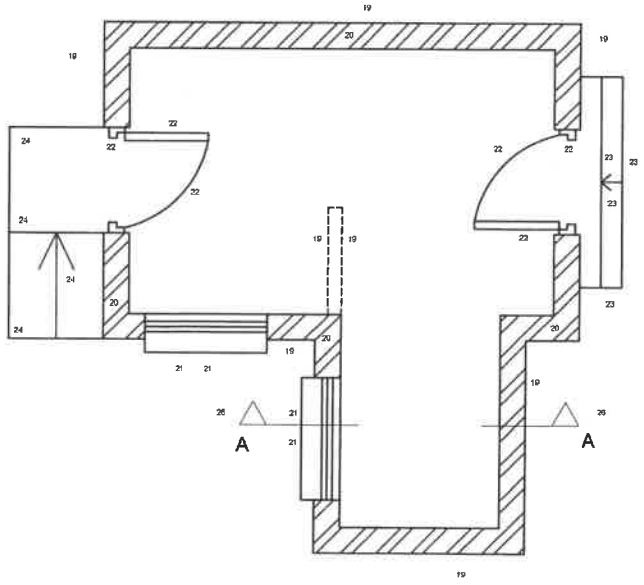

FLOOR PLAN

SCALE 1:50

Assessment Criteria

Sectional South Elevation

1	Ceiling Battens	2	
2	Wall Plates	2	
3	Ceiling Board	1	
4	Truss Plates	4	
5	Roof Truss	5	
6	Purlins	4	
7	Roof	1	
8	Walls	4	
9	Sectioned Window	5	
10	Floor & Foundation	6	
11	DPC	2	
12	Hatching	10	
13	Walls - elevation	3	
14	Roof Detail/Height	5	
15	Labels	2	
16	Outside window	6	
17	Steps	2	
18	Ramp	2	
Subtotal		66	

Floor Plan

19	Walls	8	
20	Hatching	4	
21	Windows	4	
22	Doors	6	
23	Steps	4	
24	Ramp	4	
25	Labels	2	
26	Cutting Plane	2	
Subtotal		34	
TOTAL		100	

EXAMINATION NUMBER

ANSWER SHEET 4

IEB COPYRIGHT © 2022