ieb
assessment matters

NATIONAL SENIOR CERTIFICATE EXAMINATION

2024

ENGINEERING GRAPHICS AND DESIGN
MARKING GUIDELINES
PAPER 2

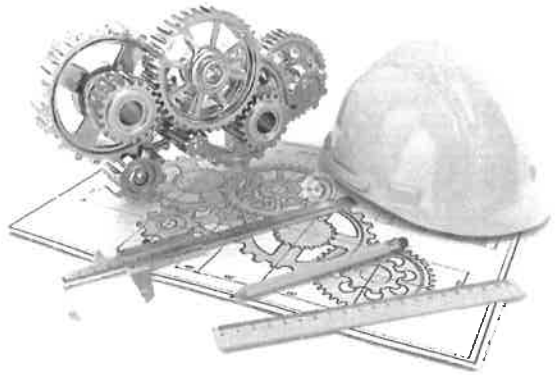

MARKS:	200
TIME:	3 HOURS

PLEASE READ THE FOLLOWING INSTRUCTIONS CAREFULLY

1. This question paper consists of **7 pages**, including the cover page and **5 questions**.
2. **All** questions must be answered.
3. Unless specified otherwise, all questions are in **third-angle orthographic projection**.
4. Unless specified otherwise, all questions are to be completed to a **scale of 1:1**.
5. **All** answer sheets must be re-stapled in numerical order and handed in, including unanswered questions.
6. All **construction work** must be shown, even if a **stencil** was used.
7. Print your **examination number** neatly on each page.
8. Use only the **answer sheets** provided.
9. Your drawings should be **well presented** and reflect **neatness** and **accuracy**. Marks will be **deducted** for untidy and inaccurate work.
10. All dimensions or detail not given must be **assumed** in **good proportion** with the rest of the drawing.
11. **Stencils** and **calculators** may be used.
12. **All** drawings must adhere to the SANS 10111-1.
13. In order to save time, **detailed assembly parts** must be **drawn to convention**.

FOR OFFICIAL USE ONLY				
QUESTION	SECTION	MARK	MODERATED	MAXIMUM	CODE
1	MECHANICAL ANALYTICAL			20	
2.1	LOCI MECHANISM			15	
2.2	LOCI CAM			25	
3	ISOMETRIC DRAWING			40	
4	MECHANICAL ASSEMBLY			100	
	TOTAL			200	

CHECKED BY

Please paste the barcoded label here

EXAMINATION NUMBER

IEB COPYRIGHT © 2024

QUESTION 1

MECHANICAL ANALYTICAL

PART A

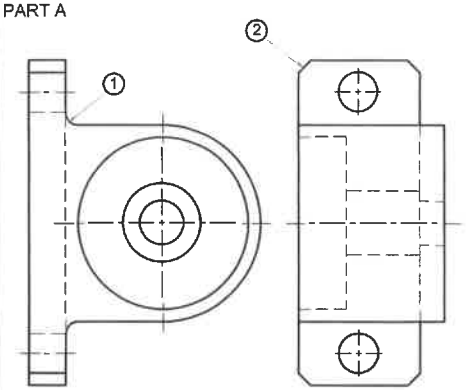

PART B

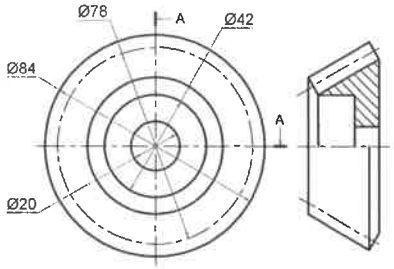

PART C

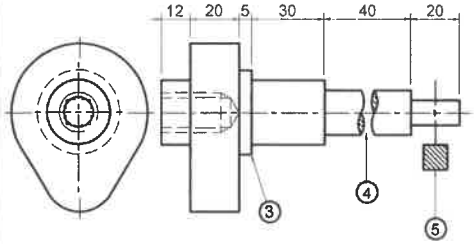

PART D

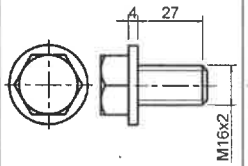

PART E

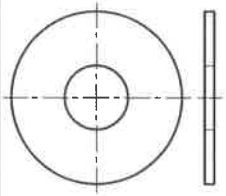

PART F

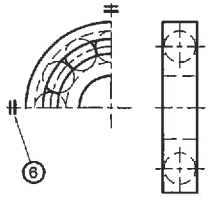

PART G

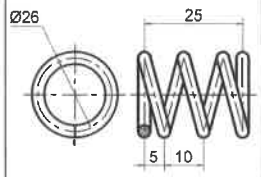

PART H

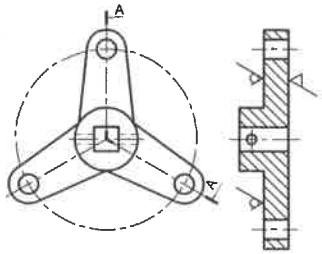

PARTS LIST			
NO	PART	QUANTITY	MATERIAL
A	BASE	1	MILD STEEL
B	BEVEL GEAR	1	STAINLESS STEEL
C	CAMSHAFT	1	STAINLESS STEEL
D	M16 BOLT	1	HIGH-TENSILE STEEL
E	BEARING COVER	1	MILD STEEL
F	BALL BEARING	1	CHROME STEEL
G	COMPRESSION SPRING	1	SPRING STEEL
H	FLANGE	1	MILD STEEL

WELDING SYMBOL

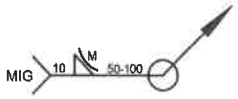

MACHINING SYMBOL

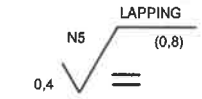

The adjacent figures show the parts of a bevel gear assembly. The questions below are based on these figures.
Choose the correct answer and write down its corresponding LETTER in the space provided.

		ANSWER	
1.1	What does Feature ***1*** on the base (Part A) represent? **A.** Round **B.** Fillet **C.** Chamfer **D.** 45° End	B	1
1.2	What does Feature ***2*** on the base (Part A) represent? **A.** Round **B.** Fillet **C.** Chamfer **D.** 45° End	C	1
1.3	What type of sectioning is shown on the bevel gear (Part B)? **A.** Full-sectioning **B.** Half-sectioning **C.** Quarter-sectioning **D.** Part-sectioning	B	1
1.4	How many parts are needed for the bevel gear assembly? **A.** Seven **B.** Eight **C.** Nine **D.** Ten	B	1
1.5	What is the total length of the camshaft (Part C)? **A.** 127 **B.** 123 **C.** 115 **D.** 95	A	1
1.6	What does Feature ***3*** on the camshaft (Part C) represent? **A.** Taper on a shaft **B.** Recess on a shaft **C.** Square on a shaft **D.** Shoulder on a shaft	D	1
1.7	What does Feature ***4*** on the camshaft (Part C) represent? **A.** Square break view **B.** Round break view **C.** Half break view **D.** Interrupted view	D	1
1.8	What type of sectioning is shown at Feature ***5*** on the camshaft (Part C)? **A.** Extended sectioning **B.** Revolved sectioning **C.** Removed sectioning **D.** Flat sectioning	C	1
1.9	What is the total length for the shaft of the M16 bolt (Part D)? **A.** Ø16x2 **B.** 31 **C.** 29 **D.** 27	C	1
1.10	What does Feature ***6*** on the ball bearing (Part F) represent? **A.** Quarter view **B.** Parallel section **C.** Square section **D.** Symmetry	D	1
1.11	What is the direction of turn of the compression spring (Part G)? **A.** Left hand turn **B.** Right hand turn	B	1
1.12	What is the pitch of the compression spring (Part G)? **A.** 5 **B.** 10 **C.** 25 **D.** Ø26	B	1
1.13	On how many surfaces is the removal of material permitted on the flange (Part H)? **A.** 1 **B.** 2 **C.** 3 **D.** 4	A	1
1.14	What type of sectioning is shown on the flange (Part H)? **A.** Full-section **B.** Half-section **C.** Part-section **D.** Aligned-section	D	1
1.15	Which dimension on the bevel gear (Part B) should be changed to a PCD? **A.** Ø20 **B.** Ø42 **C.** Ø78 **D.** Ø84	C	1
1.16	What welding process is shown by the welding symbol? **A.** MIG welding **B.** TIG welding **C.** Arc welding **D.** Machine welding	A	1
1.17	What does the circle on the welding symbol indicate? **A.** Site weld **B.** Weld all around **C.** Flame weld **D.** Fillet weld	B	1
1.18	What is the roughness value on the machining symbol? **A.** N5 **B.** 0,8 **C.** 0,4 **D.** Lapping	A	1
1.19	What is the direction of the lay on the machining symbol? **A.** Equal to **B.** Crossed **C.** Square **D.** Parallel	D	1
1.20	What is the correct symbol for third-angle orthographic projection? **A.** 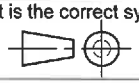 **B.**  **C.** 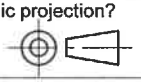 **D.** 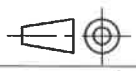	C	1

20 MARKS

EXAMINATION NUMBER

ANSWER SHEET 1

IEB COPYRIGHT © 2024

QUESTION 2.1

LOCI MECHANISM

The figure below shows a mechanism consisting of a **driver gear 1** and a **driven gear 2**, with connecting rod **AB.**
The connecting rod **AB** is pin jointed at point **A** and slides with a groove through point **C**.

The **driver gear 1** rotates **anti-clockwise**.

Use the given centre lines to construct and draw the locus of ***point B*** for one full rotation of the mechanism.

- The length of rod **AB** is 162.
- Draw the direction arrow on the driven gear.
- Show all ***constructions***.

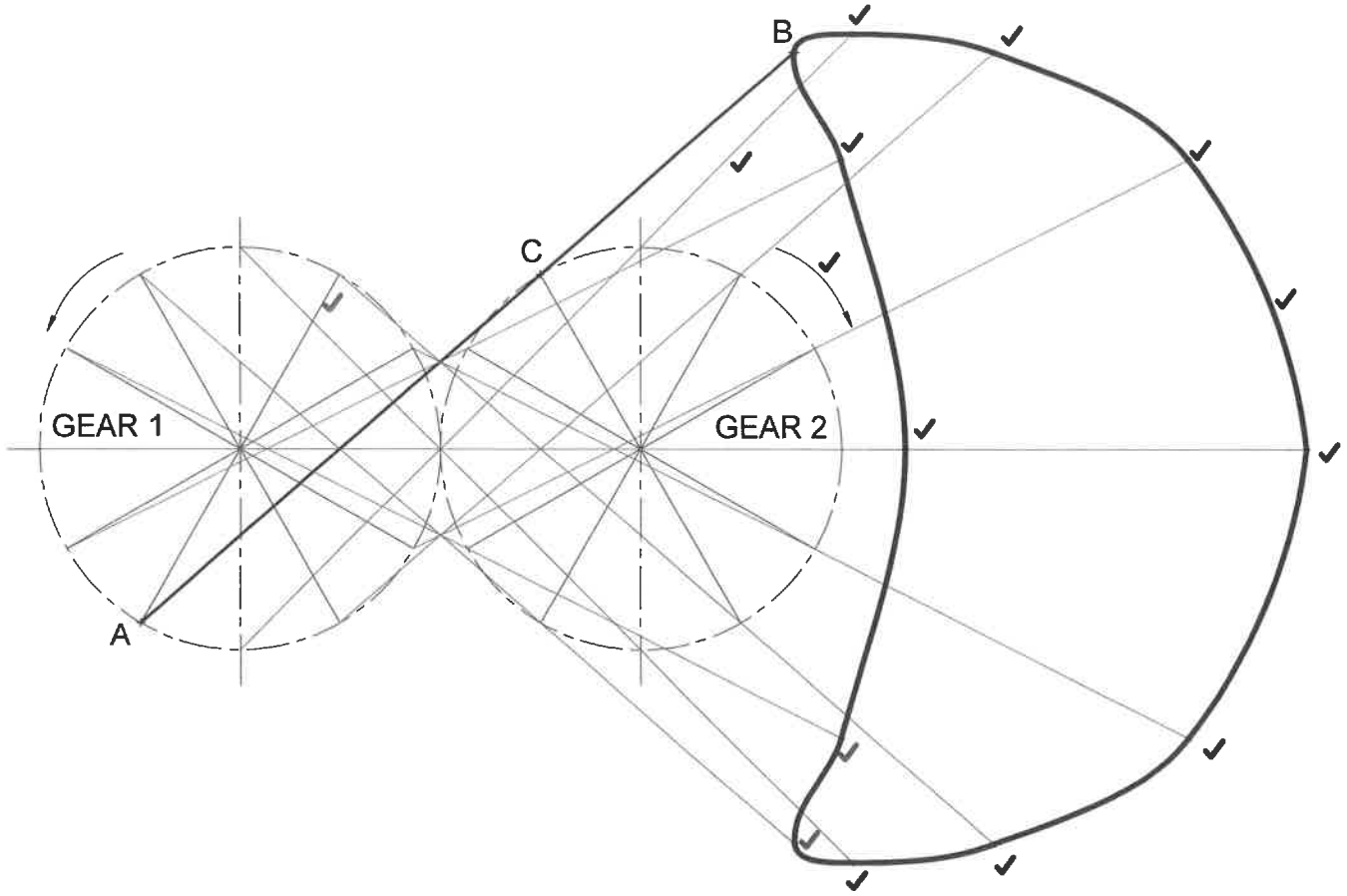

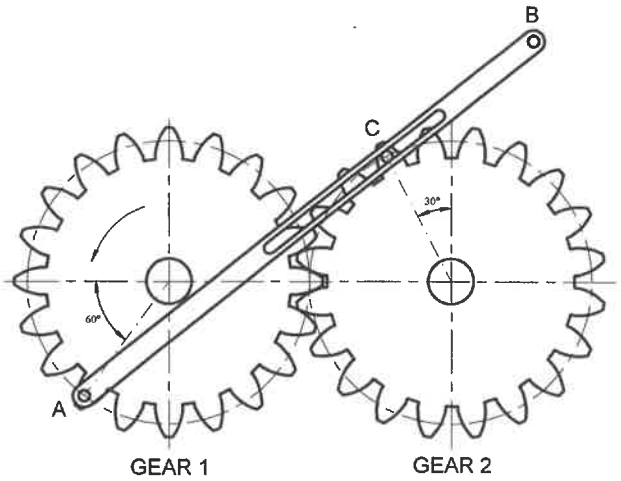

ASSESSMENT CRITERIA	
• Construction	2
• Plot Points	11
• Direction	1
• Locus	1

CON 2	✓	
PTS 11	✓	
DIR 1	✓	
LOC 1	✓	
15 MARKS		

EXAMINATION NUMBER

ANSWER SHEET 2.1

IEB COPYRIGHT © 2024

QUESTION 2

LOCI
CAM

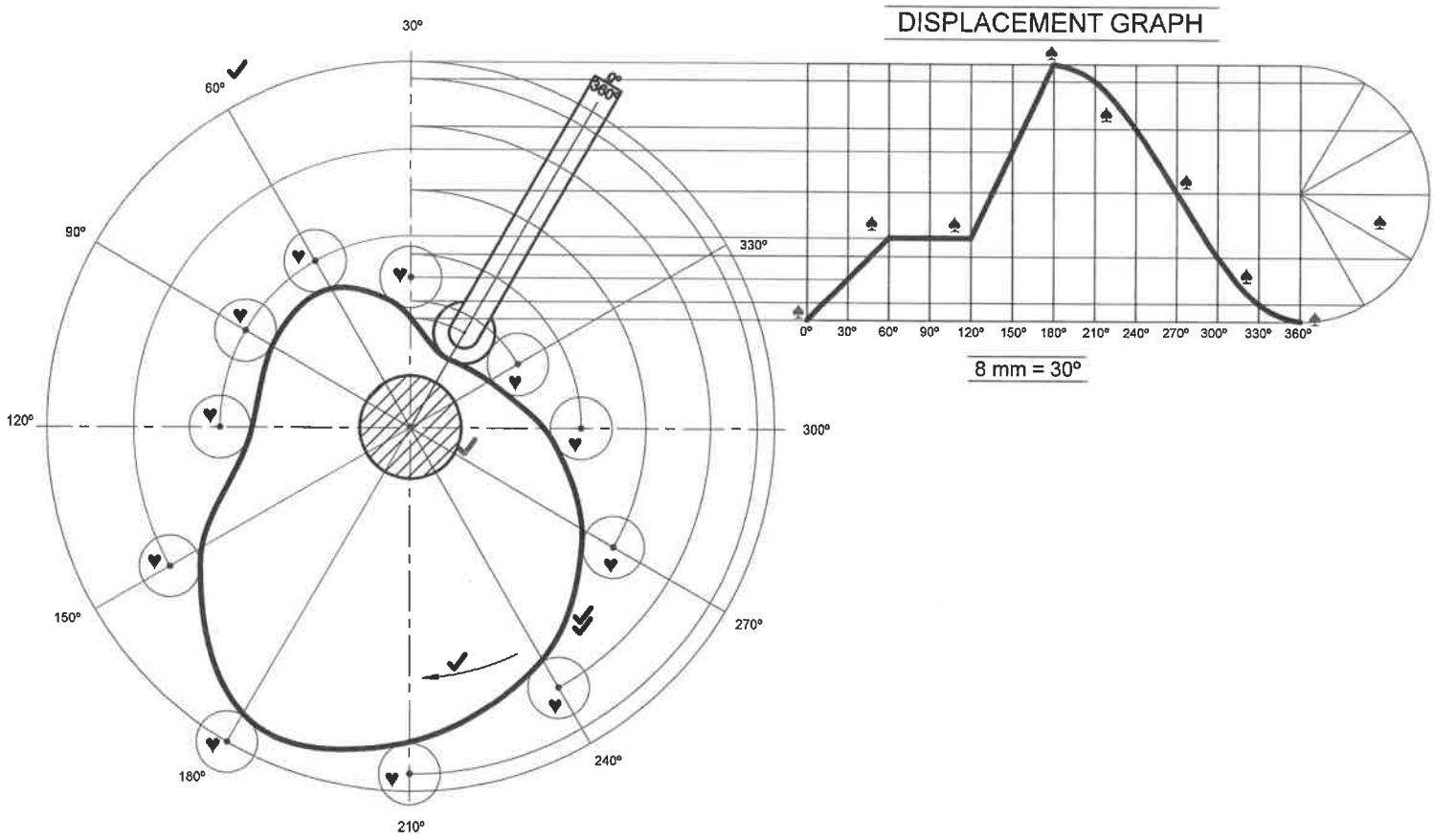

The following are given in the adjacent drawing:

- the incomplete ***graph of displacement*** in position of a ***roller-ended*** follower.
- the vertical and horizontal centre lines of the camshaft.
- the follower detail at the starting position.

The cam imparts the following motion to the follower:

- 0° — 60° the follower ***rises*** 16 mm with ***uniform motion.***
- 60° — 120° the follower is at ***rest***.
- 120° — 180° the follower ***rises*** 34 mm with ***uniform motion***.
- 180° — 360° the follower ***falls*** 50 mm to its original position with ***simple harmonic motion***.

The cam profile has the following specifications:

- The direction of rotation is ***clockwise***.
- The shaft diameter is 20 mm.
- The roller diameter is 12 mm.

Complete the following:

2.2.1 Draw the complete graph of displacement.
2.2.2 Draw and hatch the shaft.
2.2.3 Draw the direction of rotation.
2.2.4 Label all the divisions on the cam profile.
2.2.5 Draw the cam profile from the displacement graph.
2.2.6 Show all constructions.

ASSESSMENT CRITERIA

• Graph	9
• Plot Points	11
• Camshaft	1
• Locus	2
• Direction & Label divisions	2

GRPH 9	♠	
PTS 11	♥	
SHAFT 1	✓	
LOC 2	✓	
DIR 2	✓	
25 MARKS		

EXAMINATION NUMBER

ANSWER SHEET 2

IEB COPYRIGHT © 2024

QUESTION 3

ISOMETRIC DRAWING

The figures below show the front view, top view and left view of a ***CASTING***. The auxiliary view of the ***pentagon*** with a centre point **Q** is shown in the construction area.
The ***CASTING*** is cut by ***cutting-plane*** **A-A**.

3.1 Draw a neat ***half-sectioned isometric*** drawing of the ***CASTING*** on ***cutting-plane*** **A-A**.
3.2 Show all the constructions for the circle.
3.3 Make point **P** the starting point of the drawing.

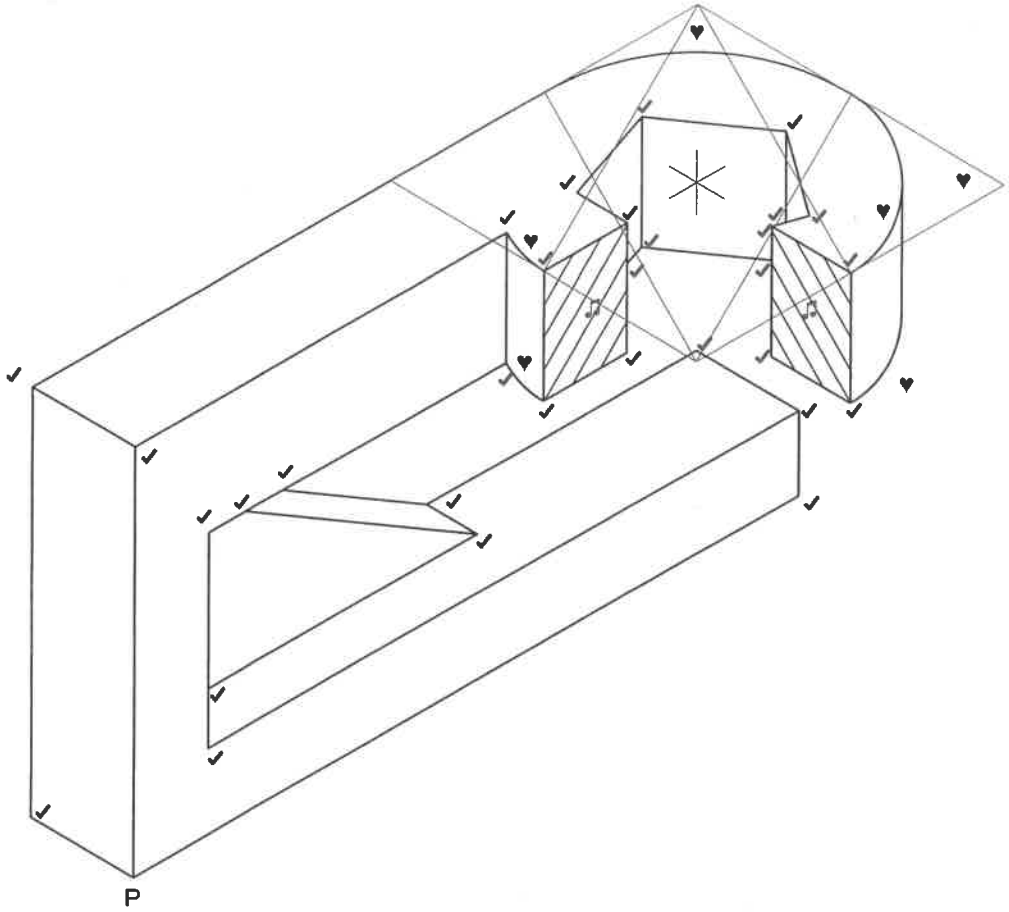

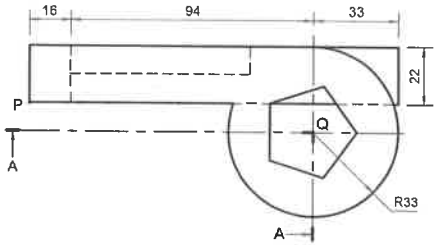

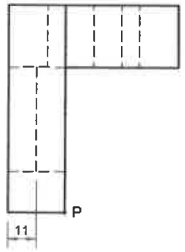

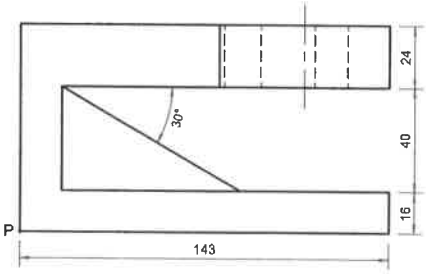

CONSTRUCTION AREA

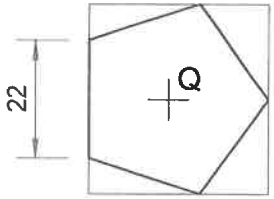

AUXILIARY VIEW

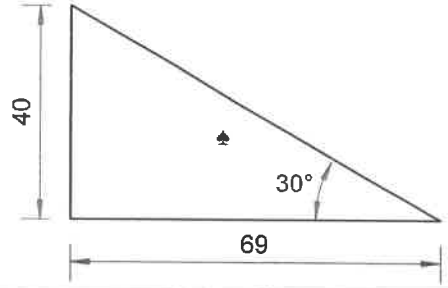

ANSWER SHEET 3

ASSESSMENT CRITERIA

• Construction	1
• Isometric Points	31
• Isometric Circles	6
• Hatching	2

CON 1	♠	
ISOM 31	✓	
CIRC 6	♥	
HAT 2	♫	

40 MARKS

EXAMINATION NUMBER

IEB COPYRIGHT © 2024

FIGURE 1

PART A

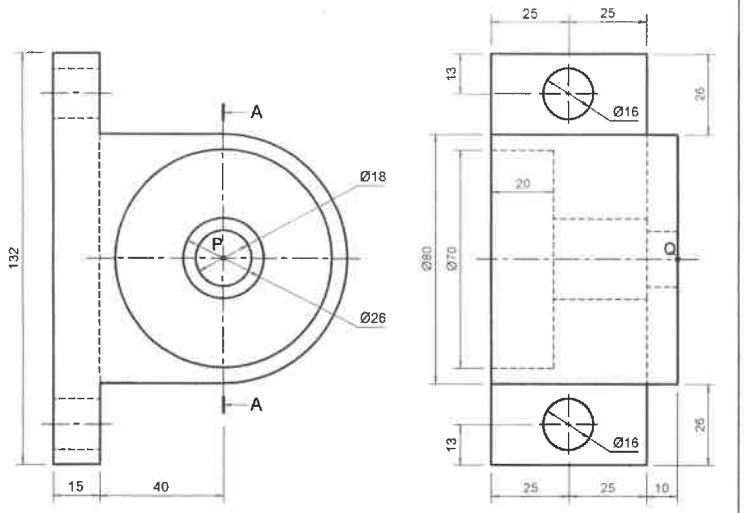

PART B

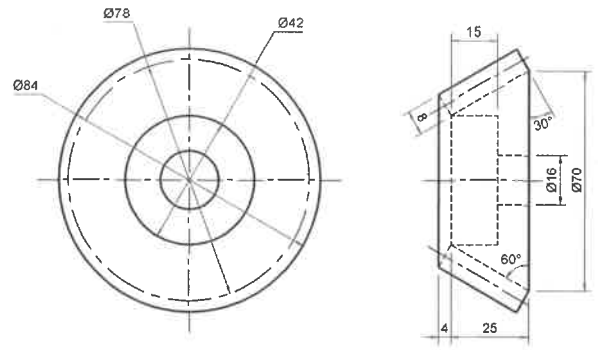

PART C

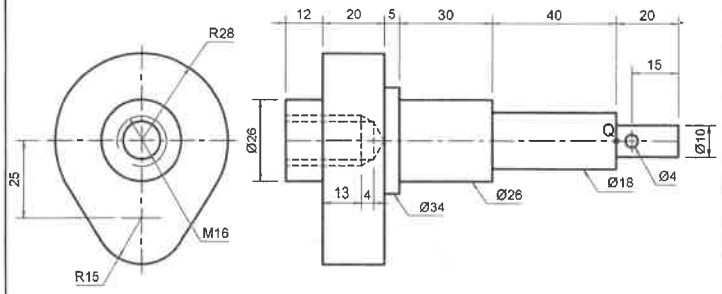

PART D

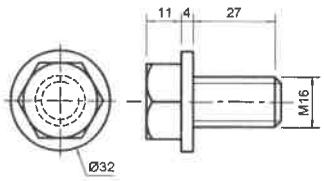

PART E

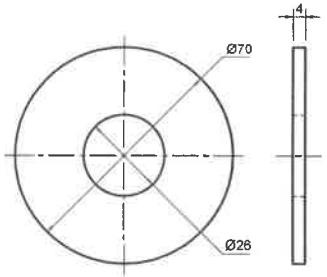

PART F

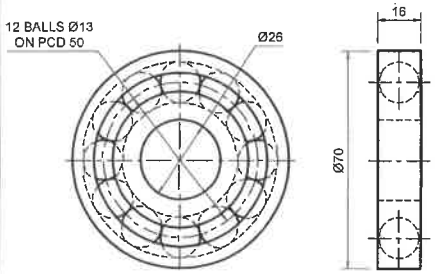

PART G

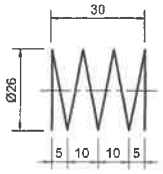

PARTS LIST			
NO	PART	QUANTITY	MATERIAL
A	BASE	1	MILD STEEL
B	BEVEL GEAR	1	STAINLESS STEEL
C	CAMSHAFT	1	STAINLESS STEEL
D	M16 BOLT	1	HIGH-TENSILE STEEL
E	BEARING COVER	1	MILD STEEL
F	BALL BEARING	1	CHROME STEEL
G	COMPRESSION SPRING	1	SPRING STEEL

QUESTION 4

MECHANICAL ASSEMBLY

Figure 1 shows the different parts (not to scale) for a ***BEVEL GEAR ASSEMBLY*** that needs to be assembled.

The ***exploded front view*** of how the parts are assembled is also shown.

Use the given centre lines and points **P** and **Q** on the base (Part A) as references to plan the drawing layout.
Complete the following on Answer Sheet 4 to a ***scale of 1:1***.

4.1 Draw a ***full sectional front view*** of the assembled parts on cutting plane **A-A** as seen on the base (Part A).

4.2 Draw an ***outside left view*** of the assembled parts. Use the given centre lines.

4.3 Please note the following:

4.3.1 Point **Q** on the shaft (Part C) fits on point **Q** on the base (Part A) and is seen in the front view.

4.3.2 Show ***2 faces*** for the ***M16 hexagonal bolt*** in the ***front view.***

4.3.3 Show the ***hidden detail*** of only the cam on the camshaft (Part C) in the ***left view***.

4.3.4 Draw all centre lines.

4.3.5 Draw the ***cutting plane*** in the ***left view***.

4.3.6 Insert 2 functional ***dimensions*** in the ***left view***.

4.3.7 Print the ***title*** and ***scale*** in the space provided.

EXPLODED FRONT VIEW

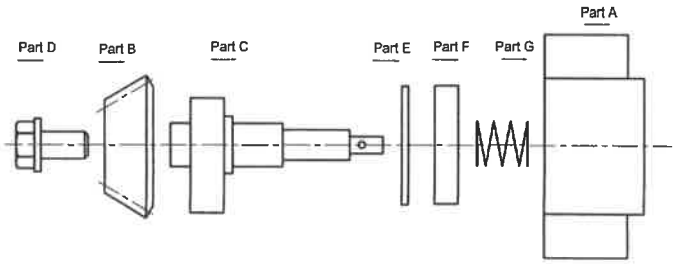

100 MARKS

EXAMINATION NUMBER

IEB COPYRIGHT © 2024

QUESTION 4

MECHANICAL ASSEMBLY

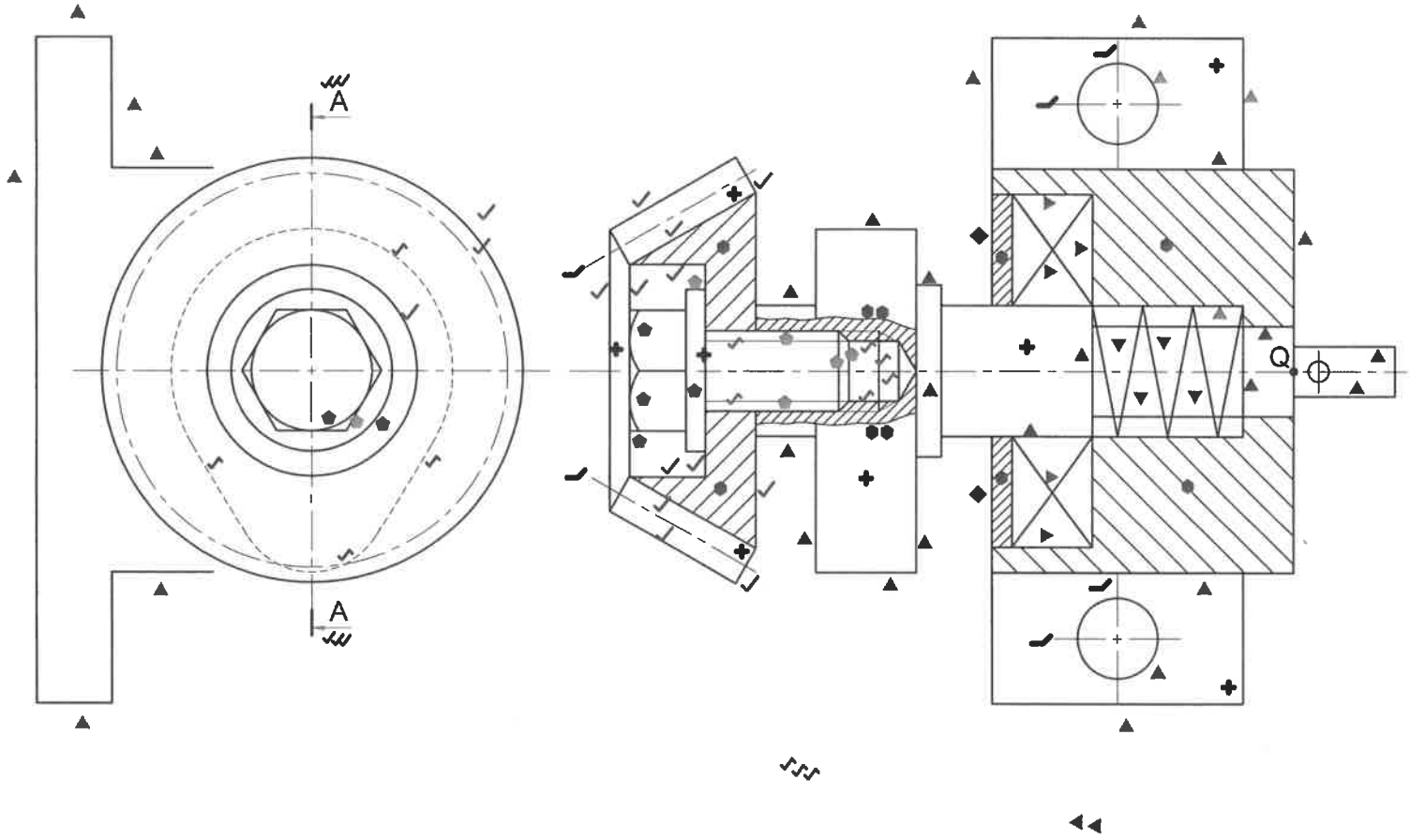

ASSESSMENT CRITERIA			
SECTIONAL FRONT VIEW			
A BASE	10	▲	
B BEVEL GEAR	12	✓	
C CAMSHAFT	14	▲	
D M16 BOLT	9	⬟	
E BEARING COVER	2	◆	
F BALL BEARING	5	▶	
G COMPRESSION SPRING	4	▼	
SCREW THREAD	6	✓	
TOTAL	62		

OUTSIDE LEFT VIEW			
A BASE	6	▲	
B BEVEL GEAR	3	✓	
D M16 BOLT	3	⬟	
HIDDEN DETAIL	4	✓	
TOTAL	16		

ADDITIONAL				
CORRECT ASS.		3	✓	
HATCHING	10/2	5	⬢	
NON-HATCHING	8/2	4	✚	
CENTRE LINES	6/2	3	✓	
DIMENSIONS		2	◀	
CUTTING PLANE	6/2	3	✓	
TITLE & SCALE		2	✓	
TOTAL		22		
TOTAL		**100**		

TITLE:	BEVEL GEAR ASSEMBLY ✓	SCALE:	SCALE 1:1 ✓

ANSWER SHEET 4

EXAMINATION NUMBER

IEB COPYRIGHT © 2024