assessment matters

NATIONAL SENIOR CERTIFICATE EXAMINATION

MAY 2025

ENGINEERING GRAPHICS AND DESIGN
PAPER 2

MARKS: 200
TIME: 3 HOURS



FOR OFFICIAL USE ONLY					
QUESTION	SECTION	MARK	MODERATED	MAXIMUM	CODE
1	MECHANICAL ANALYTICAL			20	
2.1	LOCI MECHANISM			15	
2.2	LOCI CAM			25	
3	ISOMETRIC DRAWING			40	
4	MECHANICAL ASSEMBLY			100	
	TOTAL			200	

PLEASE READ THE FOLLOWING INSTRUCTIONS CAREFULLY

1. This question paper consists of **7 pages**, including the cover page and **5 questions**.
2. **All** questions must be answered.
3. Unless specified otherwise, all questions are in **third-angle orthographic projection.**
4. Unless specified otherwise, all questions are to be completed to a **scale of 1:1**.
5. **All** answer sheets must be re-stapled in numerical order and handed in, including unanswered questions.
6. All **construction work** must be shown, even if a **stencil** was used.
7. Print your **examination number** neatly on each page.
8. Use only the **answer sheets** provided.
9. Your drawings should be **well presented** and reflect **neatness** and **accuracy**. Marks will be **deducted** for untidy and inaccurate work.
10. All dimensions or detail not given must be **assumed in good proportion** with the rest of the drawing.
11. **Stencils** and **calculators** may be used.
12. **All** drawings must adhere to the SANS 10111-1.
13. In order to save time, **detailed assembly parts** must be **drawn to convention.**

Please paste the barcoded label here

CHECKED BY

N12EGAD-2-E

EXAMINATION NUMBER

IEB COPYRIGHT © 2025

QUESTION 1
MECHANICAL
ANALYTICAL

The adjacent figures show the parts of a DUMPER. The questions below are based on these figures. Choose the correct answer and write down its corresponding LETTER in the space provided.

	Question				Answer	
1.1	Which company manufactures the parts of the dumper?					1
	A. CAT International	B. Benford Dumper	C. JCB Corporate	D. Yellow Machine Engineering		
1.2	When was the Yellow Machine Engineering company established?					1
	A. 1978	B. 1987	C. 2023	D. 1970		
1.3	Who checked the drawing?					1
	A. D Mogale	B. S de Witt	C. J Doogan	D. P de Witt		
1.4	How many parts are manufactured from mild steel?					1
	A. 8	B. 3	C. 5	D. 4		
1.5	How many balls are in the ball bearing PART B?					1
	A. 4	B. 20	C. 25	D. 26		
1.6	In which SI unit are the dimensions presented?					1
	A. mm	B. cm	C. m	D. km		
1.7	Which drawing program was used?					1
	A. INVENTOR	B. TURBOCAD 2023	C. AUTOCAD	D. TURBOCAD Pro		
1.8	What does the abbreviation NTS stand for?					1
	A. No the scale	B. Not to scale	C. Next to scale	D. Now this scale		
1.9	What is the total length of the pivot pin PART C?					1
	A. 100	B. 124	C. 150,4	D. 148		
1.10	What type of section is shown on the centre pivot casting PART D?					1
	A. Full section	B. Part section	C. Revolved section	D. Removed section		
1.11	What type of thread is used on the M12 flange head set-screw PART A?					1
	A. Internal screw thread	B. External screw thread	C. Hexagonal thread	D. Square thread		
1.12	What does the M12 flange head set-screw have at the base of the head?					1
	A. Washer	B. Integrated flange	C. Disc	D. Plate		
1.13	Name the feature at M on the centre pivot casting PART D.					1
	A. Arc	B. Curve	C. Fillet	D. Round		
1.14	Determine the dimension N on the M24 nut PART G.					1
	A. 16,8	B. 19,2	C. 36	D. 24		
1.15	What type of welding process is shown on the welding symbol?					1
	A. Weld all round	B. Site weld	C. Gas weld	D. Grind weld		
1.16	What is the direction of the lay on the machining symbol?					1
	A. Clockwise	B. Crossed	C. Multidirectional	D. Cylindrical		
1.17	What is the roughness value on the machining symbol?					1
	A. 0,3	B. 0,03	C. 0,003	D. Unknown		
1.18	What is the surface area of the washer PART E? (2 decimal places)					1
	A. 6046,86	B. 1964,29	C. 1511,71	D. 81,71		
1.19	What is the machining allowance on the machining symbol?					1
	A. 0,3	B. 0,03	C. 0,003	D. Unknown		
1.20	What is the correct symbol for third angle orthographic projection?					1
	A. 	B. 	C. 	D.		
				TOTAL:		20



Yellow Machine Engineering

'You wreck it we fix it'

est. 1978. Johannesburg

PO Box 123 Johannesburg 2194 | 20 Oil Rd Randburg 2194 | www.yme.com john.1@yme.com steve.g@yme.com | Tel: (011) 2965841 Fax: (011) 2965822

DRAWN BY:	D Mogale
CHECKED BY:	S de Witt
APPROVED BY:	J Doogan
DRAWING PROGRAM:	TURBOCAD 2023
REFERENCE NO:	BTE/42

PART D

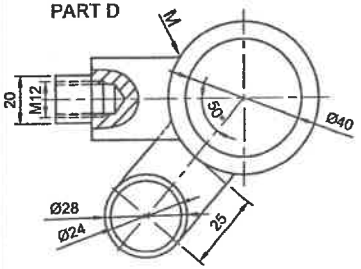

PART B

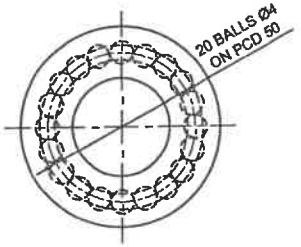

PART C

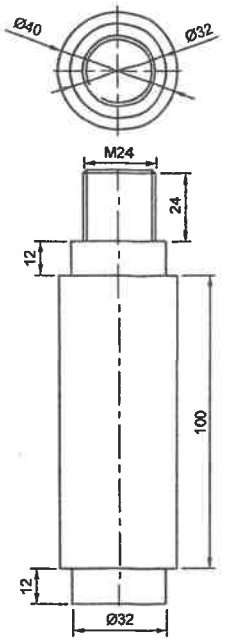

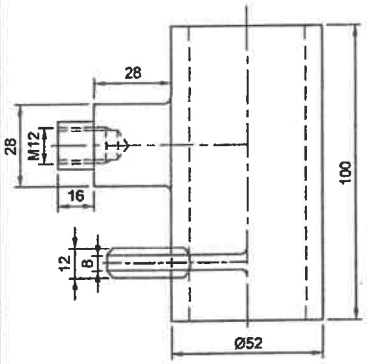

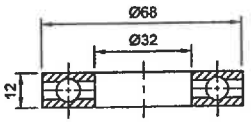

PART G

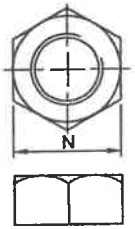

PART E

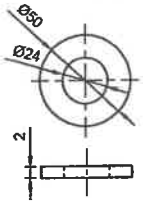

PART A

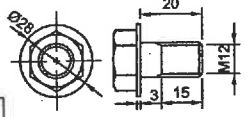

PART F

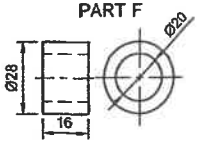

PART LIST			
A	M12 FLANGE HEAD SET SCREW	1	MILD STEEL
B	BALL BEARING	1	CHROME STEEL
C	PIVOT PIN	1	MILD STEEL
D	CENTRE PIVOT CASTING	1	CAST IRON
E	WASHER	1	MILD STEEL
F	BUSH Ø28	1	PLASTIC
G	M24 NUT	1	MILD STEEL

MACHINING SYMBOL	WELDING SYMBOL
GRIND 0,03 / 0,003 0,3 ▽ C	GAS
MACHINING COMPANY: Yellow Machine Engineering	

ANSWER SHEET 1

EXAMINATION NUMBER

IEB COPYRIGHT © 2025

QUESTION 2.1

LOCI MECHANISM

Given:
A schematic drawing of a mechanism consisting of wheel A and wheel D, crank AB, rod BH, sliding rod EF and vertical groove MN.

Specifications:
- Rod BH is pin-jointed to wheel A at B and slides through point C on wheel D.
- Sliding rod EF is pin-jointed to rod BH at E.
- F of rod EF slides up and down through fixed vertical groove MN.
- Point G is on EF.
- As crank AB rotates, rod BH slides freely through C causing sliding rod EF to oscillate.

Instructions:
- Trace the loci generated by point G for ONE complete rotation of crank AB.
- Show all constructions.
- Indicate the direction of rotation.

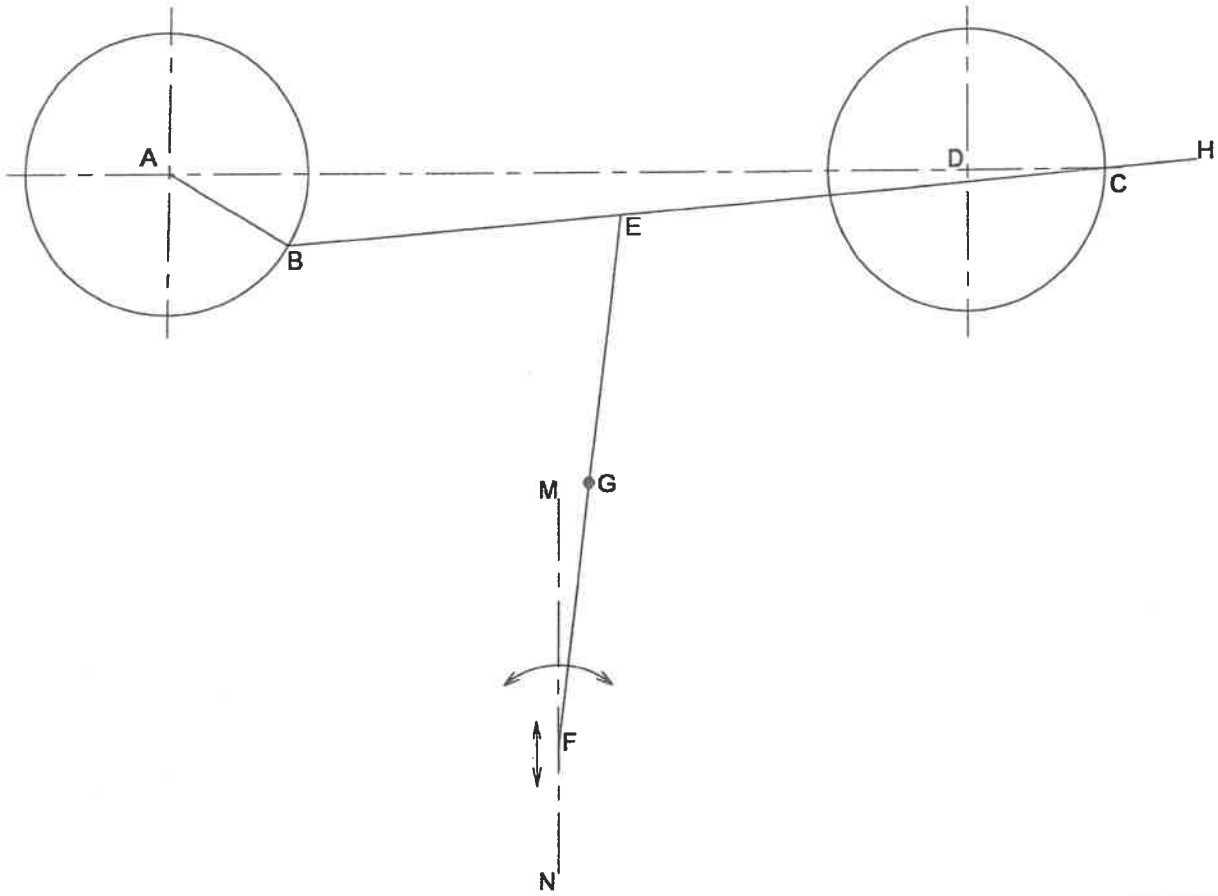

ASSESSMENT CRITERIA	
• Construction	2
• Plot Points	11
• Direction	1
• Locus	1

CON 2		
PTS 11		
DIR 1		
LOC 1		
15 MARKS		

ANSWER SHEET 2.1

EXAMINATION NUMBER

IEB COPYRIGHT © 2025

QUESTION 2.2

LOCI
CAM

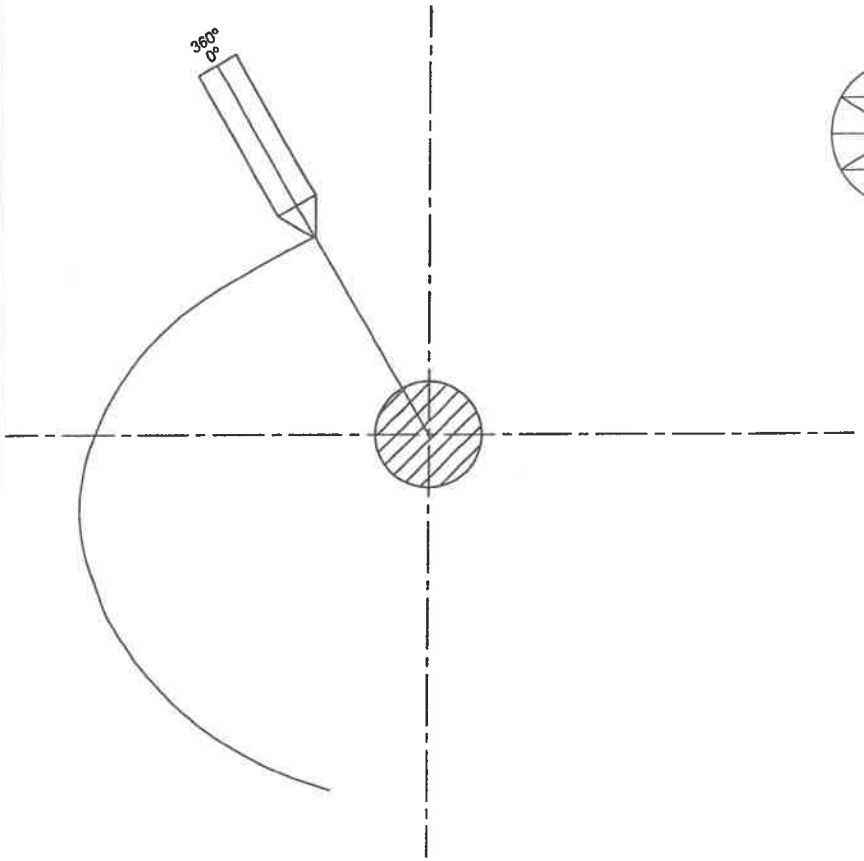

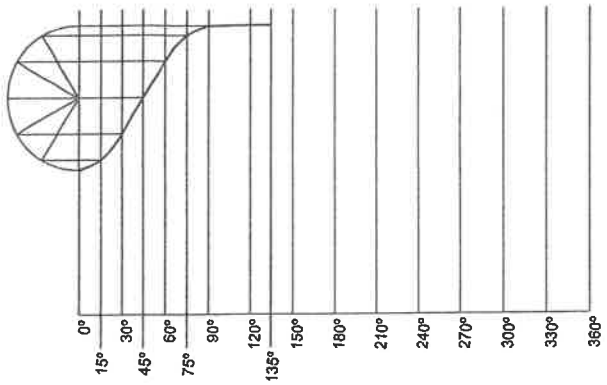

DISPLACEMENT GRAPH
SCALE 8 mm = 30°

The following are given:

- The starting point and part of the ***displacement graph***.
- The vertical and horizontal centre lines of the camshaft.
- The camshaft and follower detail at the starting position.
- The cam rotates in a clockwise direction.

The cam imparts the following motion to the follower:

- 0° - 90° the follower ***rises*** 27 mm with ***simple harmonic motion*** **(given)** to its highest point.
- 90° - 135° the follower is at ***rest*** **(given)**.
- 135°- 225° the follower ***falls*** 54 mm with ***uniform acceleration and retardation***.
- 225° - 270° the follower is at ***rest***.
- 270° - 300° the follower ***rises*** 7mm with a uniform motion.
- 300 - 360° the follower ***returns to its original position***.

Complete the following:

2.2.1 The graph of displacement.
2.2.2 The cam profile from the displacement graph.
2.2.3 All constructions.
2.2.4 Show the direction of rotation.

ASSESSMENT CRITERIA

• Graph	10
• Plot points	10
• Construction (Name, Degrees & Hatch)	3
• Dimension arrow	1
• Locus	1

GRPH 10		
PTS 10		
CON 3		
DIR 1		
LOC 1		
25 MARKS		

EXAMINATION NUMBER

ANSWER SHEET 2.2

IEB COPYRIGHT © 2025

CONSTRUCTION AREA

QUESTION 3

ISOMETRIC DRAWING

The figures below show the front view and top view of a CASTING. The CASTING is cut by cutting plane B-B.

3.1 Draw a neat sectioned isometric drawing of the CASTING on cutting-plane B-B.
3.2 Draw the auxiliary views in the construction area.
3.3 Show all the construction for the circles.
3.4 Make point X the starting point of your drawing.

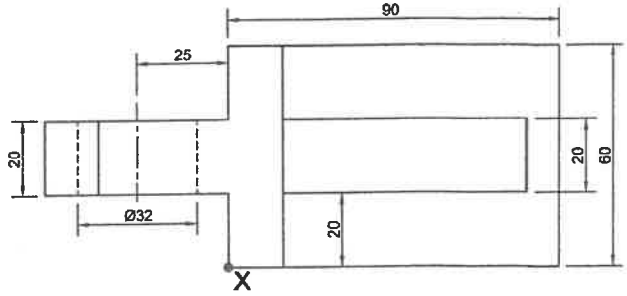

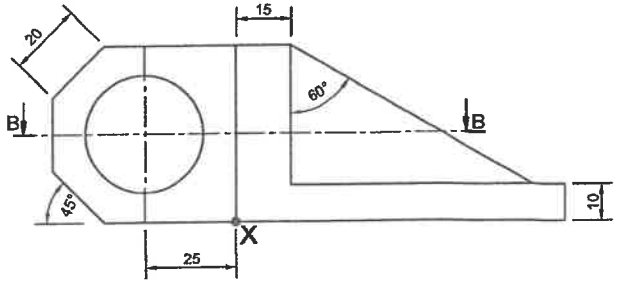

X

ASSESSMENT CRITERIA

• Construction	2
• Isometric Points	31
• Isometric Circle	5
• Hatching	2

CON 2		
ISOM 31		
CIRC 5		
HAT 2		
40 MARKS		

EXAMINATION NUMBER

ANSWER SHEET 3

IEB COPYRIGHT © 2025

QUESTION 4

MECHANICAL ASSEMBLY

Figure 1

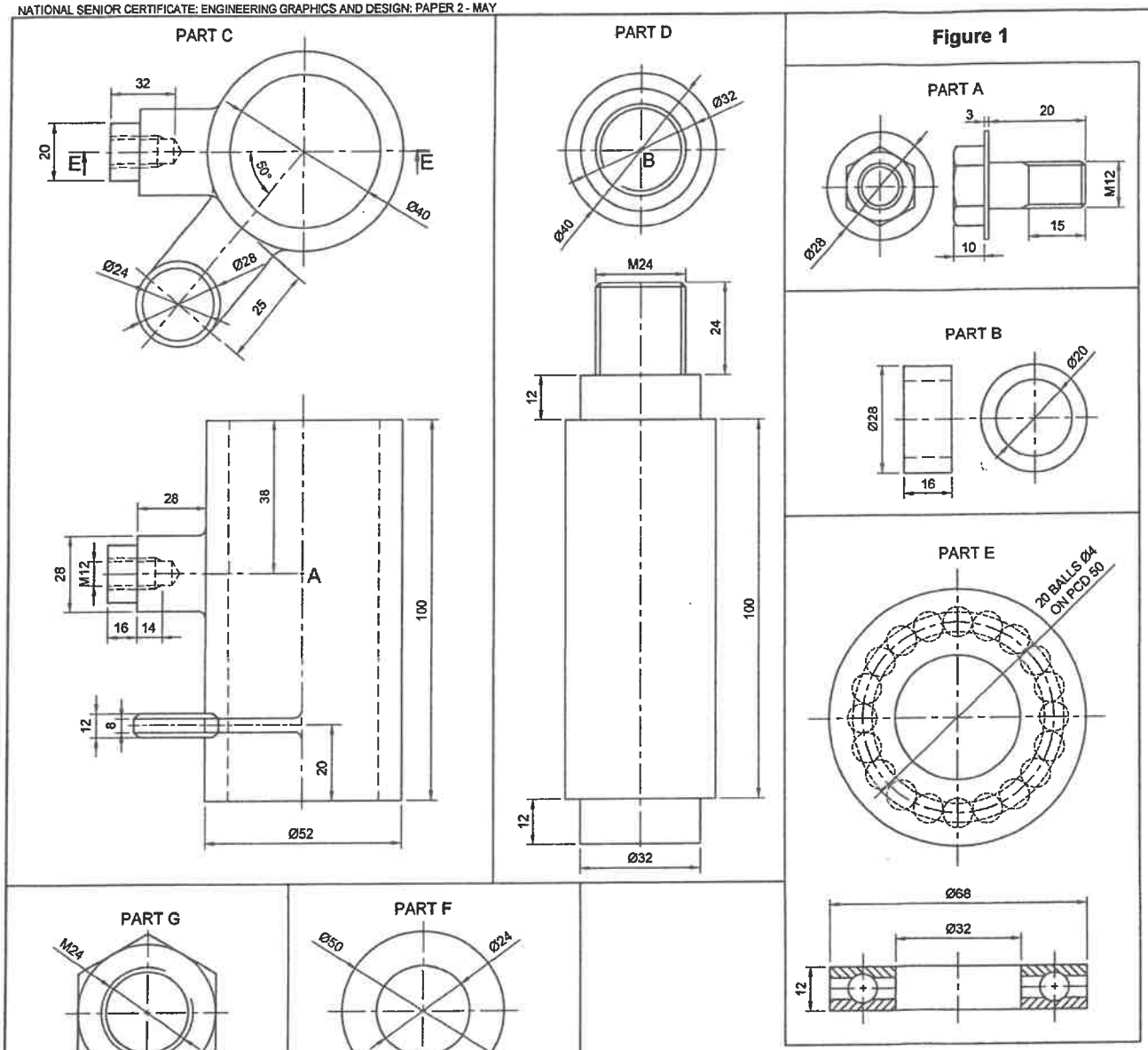

PART LIST			
A	FLANGE HEAD SET SCREW M12	1	MILD STEEL
B	BUSH Ø28	1	PLASTIC
C	CENTRE PIVOT CASTING	1	CAST IRON
D	PIVOT PIN	1	MILD STEEL
E	BALL BEARING	1	CHROME STEEL
F	WASHER	1	MILD STEEL
G	NUT M24	1	MILD STEEL

Figure 1 shows the pivot parts (not to scale) for a ***DUMPER*** that needs to be assembled.

The ***exploded isometric view*** of how the parts are assembled is also shown.

Complete the following on Answer Sheet 4 to a ***scale of 1:1***.
Use the given centre lines and point **A** on the Centre Pivot Casting (Part C) and point **B** on the Pivot Pin (Part D) as references to plan the drawing layout on page 7.

4.1 Draw a **sectioned front view** on cutting plane E-E of the assembled pivot parts for the DUMPER. The front view is seen from the direction of the arrow on the exploded isometric drawing. The cutting plane is seen in the top view of the centre pivot casting (Part C).
4.2 The **top view.**
4.3 Please note the following:
4.3.1 Draw the **M12 flange head set screw** in the **sectioned front view only,** showing **3 faces.**
4.3.2 Show **2 faces** for the **M24 hexagonal nut** in the **sectioned front view.**
4.3.3 Draw all the centre lines.
4.3.4 Draw the **cutting plane** in the **top view.**
4.3.5 Print the **title** and **scale** in the space provided.
4.3.6 No **hidden detail** is required for this drawing.
4.3.7 Draw the ball bearing (Part E) using SANS 10111 **conventions.**
4.3.8 All unspecified radii is R4.

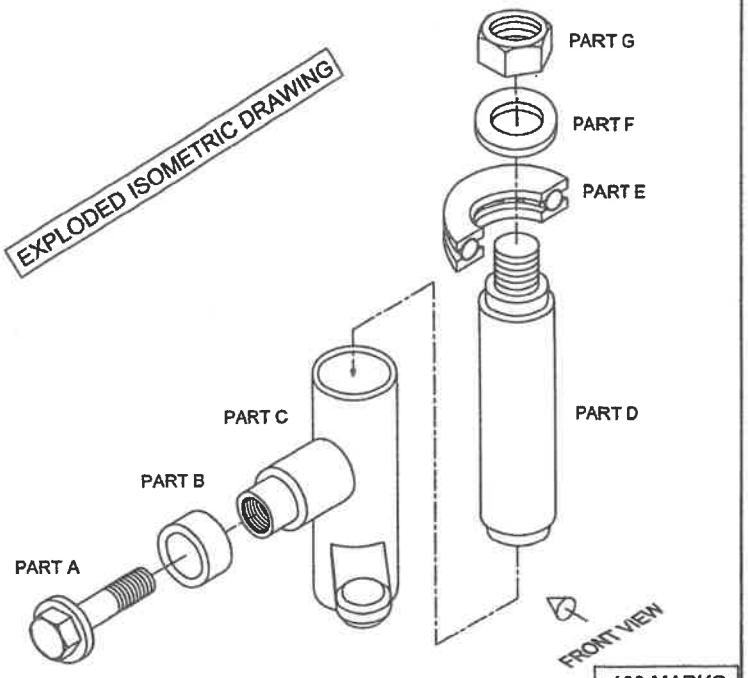

100 MARKS

EXAMINATION NUMBER

IEB COPYRIGHT © 2025

QUESTION 4

MECHANICAL ASSEMBLY



ASSESSMENT CRITERIA				
SECTIONED FRONT VIEW				
1	FLANGE HEAD SET SCREW	16		
2	WASHER	2		
3	BALL BEARING	4		
4	PIVOT PIN	12		
5	CENTRE PIVOT CASTING	15		
6	BUSH	4		
7	M24 NUT	5		
	SUBTOTAL:	58		
TOP VIEW				
8	M24 NUT	2		
9	WASHER	1		
10	BALL BEARING	1		
11	CENTRE PIVOT CASTING	7		
12	PIVOT PIN	2		
13	BUSH	3		
	SUBTOTAL:	16		
ADDITIONAL				
TITLE AND SCALE		2		
CUTTING PLANE		4		
HATCHING		6		
NON HATCHING		7		
CENTRE LINES		3		
CORRECT ASSEMBLY		4		
	SUBTOTAL:	26		
	TOTAL:	100		

TITLE:		SCALE:	

ANSWER SHEET 4

EXAMINATION NUMBER

IEB COPYRIGHT © 2025